Moments Diagrams

Exam code: 9MA0

Download PDF

Written by: Dan Finlay
Updated on 25 November 2025

SaveMyExams

Did this video help you? Yes No

Moments diagrams

When an object is modelled as a **particle** we do **not** need to consider the **rotation** of the object due to forces. When we model an object as a **rigid body** then we need to consider the rotation of the object.

Help me understand

What is a moment?

- The **moment** of a force is the measure of its ability to cause a body to **rotate** about a specific point (usually called the **pivot**)
- The **units** for moments are **newton metres** (N m)
- A force can cause a body to rotate **clockwise** or **anti-clockwise**
- The moment of a force about a point is calculated by **multiplying** the magnitude of the **force** by the **perpendicular distance** from the line of action of the force to the point
  - We can choose the **positive direction** to be **clockwise** or **anti-clockwise** and the **negative direction** is the **opposite**
  - A **zero moment** will not cause a body to rotate
- The **moment** of a force about a point is **zero** if the line of action of the force goes through the point
- If the force is not acting perpendicular to the distance given you will need to use right-angled **trigonometry** to find the perpendicular distance

Stuck on something?
Ask questions and get help with exactly what you're revising.
Got it

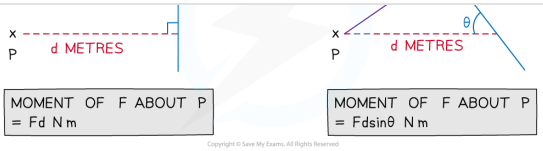

How do I know if a moment is clockwise or anti-clockwise?

- A clockwise moment will cause a body to rotate in the clockwise direction
- To visualise this:
  - Imagine that the perpendicular line from the point to the force is the radius of a circle
  - The direction of the force tells you which way the circle goes round

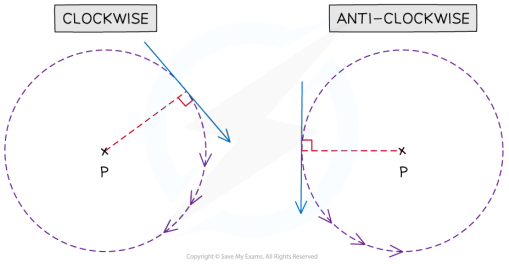

What is the resultant moment?

- The **resultant** moment is the **sum** of **all** the moments acting on a body (both positive and negative)
- To find the resultant moment:
  - Define the positive direction (clockwise or anti-clockwise)
  - **Add together** all the moments in **that direction**
  - **Subtract all** the moments in the **opposite direction**
  - The overall value is the resultant moment

- The **sign** of the **resultant** moment indicates which direction the body will rotate
  - Positive will be the direction chosen as positive
  - Negative will be the opposite direction

Worked Example

Calculate the resultant moment about P of the forces indicated in the following diagram.

Answer:

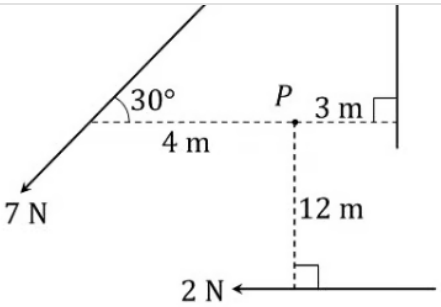

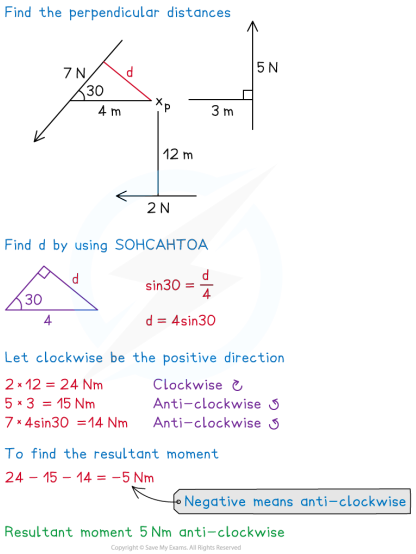

Examiner Tips and Tricks

- Always define a positive direction as either clockwise or anti-clockwise.
- It is best to state the magnitude of a moment and write its direction when giving a final answer.

Teacher only

New! Exclusive Teacher-Only Questions

- Fresh, expert-written questions
- Students can't access them
- Fair accurate tests - built fast

Explore in Test Builder →

Test yourself

© Copyright 2015–2026 Save My Exams Ltd. All Rights Reserved.

Neither IBO nor College Board were involved in the production of, and do not endorse, the resources created by Save My Exams.