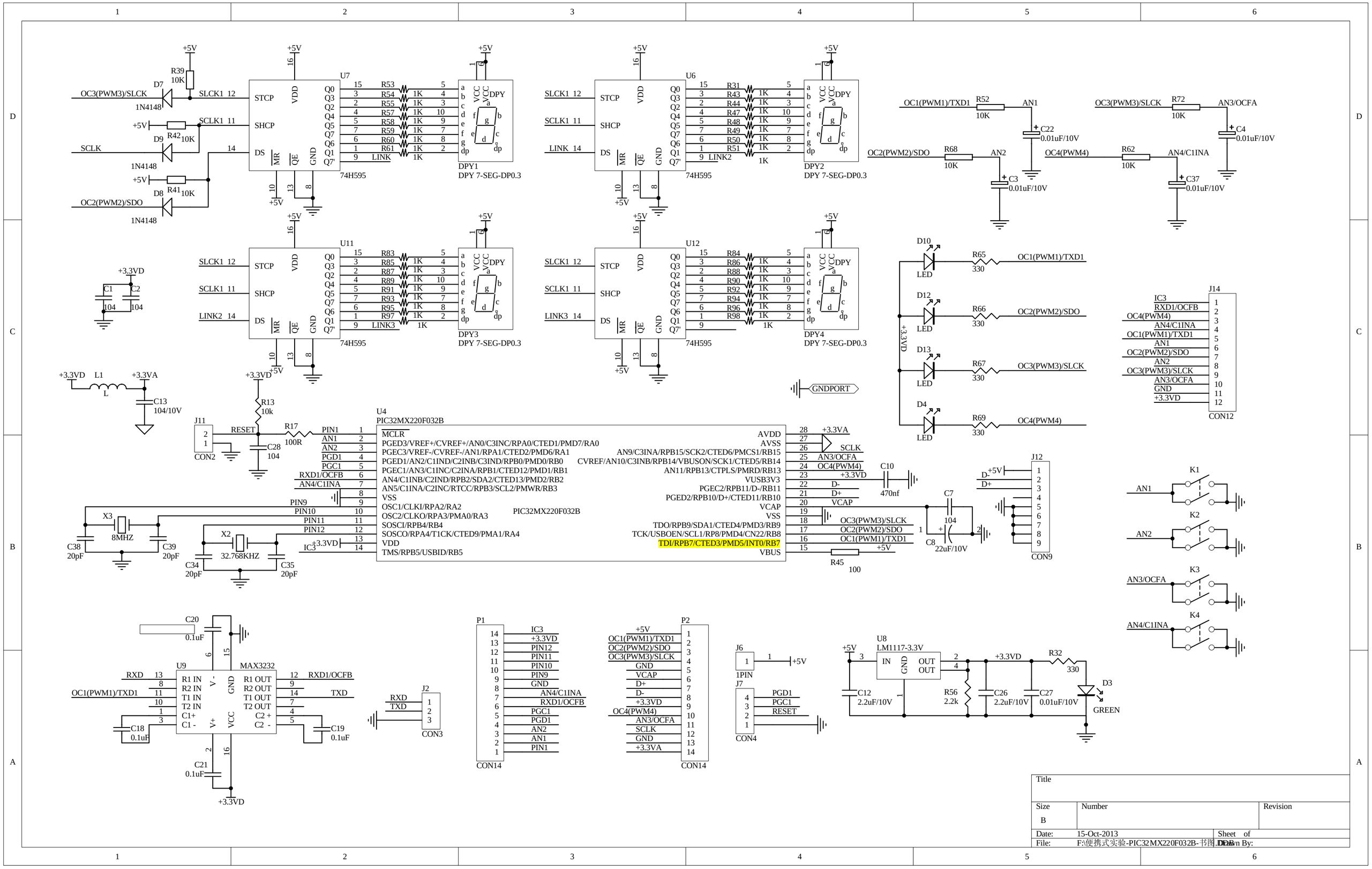

Title		
Size B	Number	Revision
Date: 15-Oct-2013	Sheet of	
File: F:\便携式实验-PIC32MX220F032B-书图.DDB	Drawn By:	