King Abdulaziz University

College of Engineering

Electrical and Computer Engineering

EE423

Design and Verification of a Narrowband Matching Network at 2.4 GHz:

NAME	ID
Waleed Alhubaishe	2237324

Final Project Report - Impedance Matching at 2.4 GHz

1. Introduction

Impedance matching is essential in RF systems to maximize power transfer and minimize reflections. In this project, a load impedance of ZL = 22 − j37 Ω must be matched to a 50-Ω system at 2.4 GHz. Three matching methods were implemented: L-network using lumped components, short-circuited shunt stub, and an open-circuited shunt stub.

2. the reflection coefficient and VSWR ≤ 2 over the widest bandwidth.

Reflection coefficient:

$\Gamma L = (ZL - Z0) / (ZL + Z0)$

$\Gamma L \approx -0.099 - j0.565 \rightarrow |\Gamma L| \approx 0.573$

$S11\ (dB) = 20 \log10(|\Gamma L|) \approx -4.83$ dB

$VSWR = (1 + |\Gamma L|) / (1 - |\Gamma L|) \approx 3.69$

3. Load Impedance Analysis

Given ZL = 22 − j37 Ω, the reactive part corresponds to a capacitive reactance of −37 Ω at 2.4 GHz. The equivalent capacitance is C = 1.79 pF. This load model is used for all simulations.

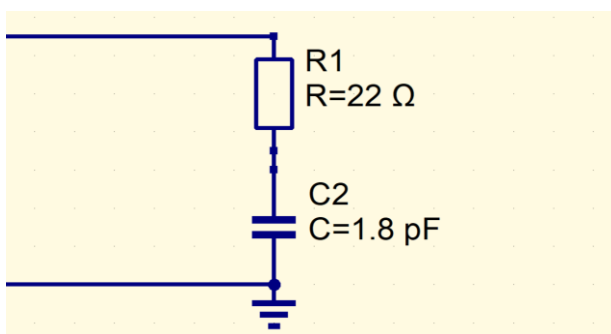

4. L-Network Matching – Design

To match ZL = 22 − j37 Ω, a shunt capacitor of 1.5 pF cancels part of the reactance and a series inductor of 4.10 nH completes the match. This forms a classical shunt-C, series-L L-network.

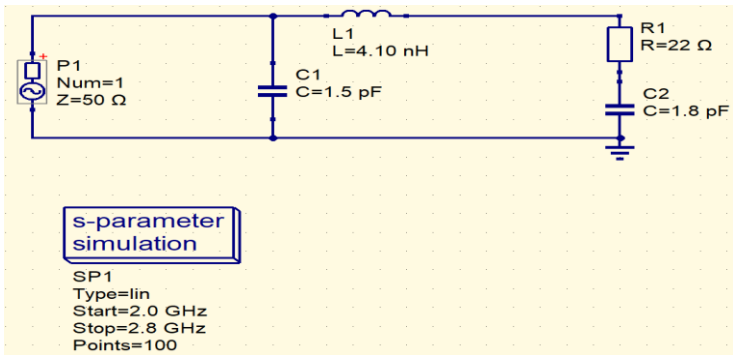

5. L-Network Simulation Results

The L-network shows extremely strong matching: S11 ≈ −65 dB at 2.4 GHz. However, bandwidth is narrowest among the three techniques. This topology is simple and ideal for lumped-element implementations.

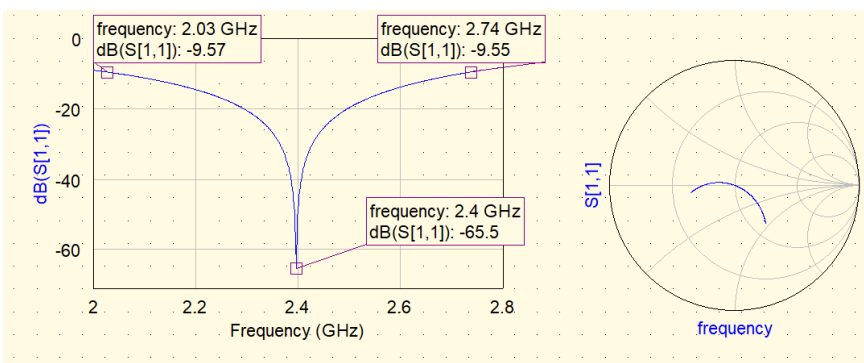

6. Open-Shunt Stub Matching – Design

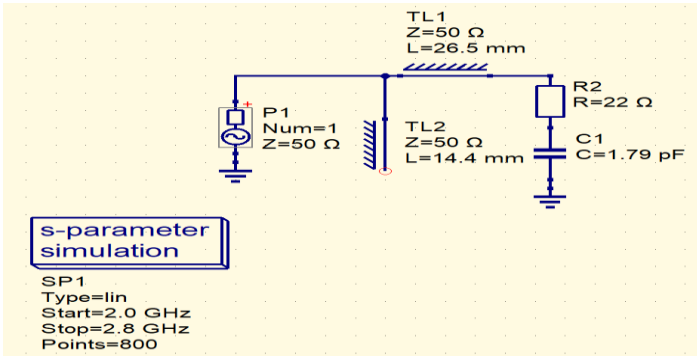

7. Open-Stub Simulation Results

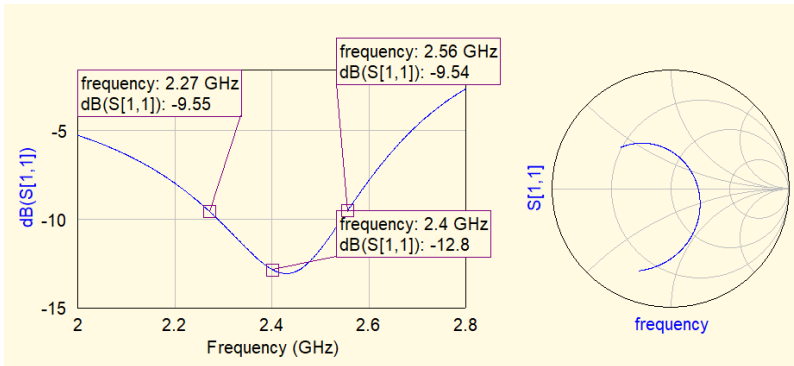

8. Short-Shunt Stub Matching – Design

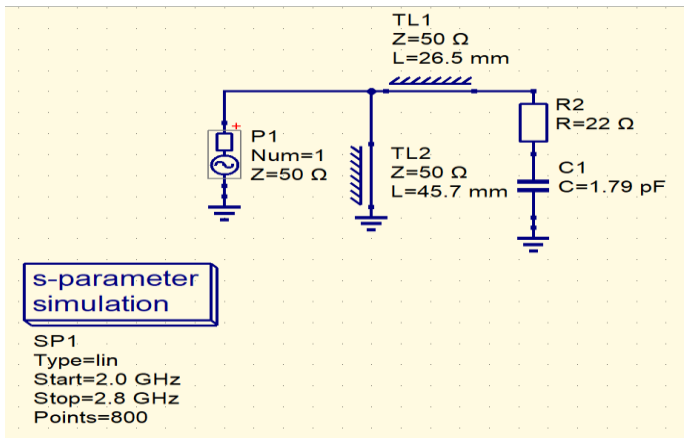

9. Short-Stub Simulation Results

Simulated S11 shows a clear matching dip around 2.4 GHz.

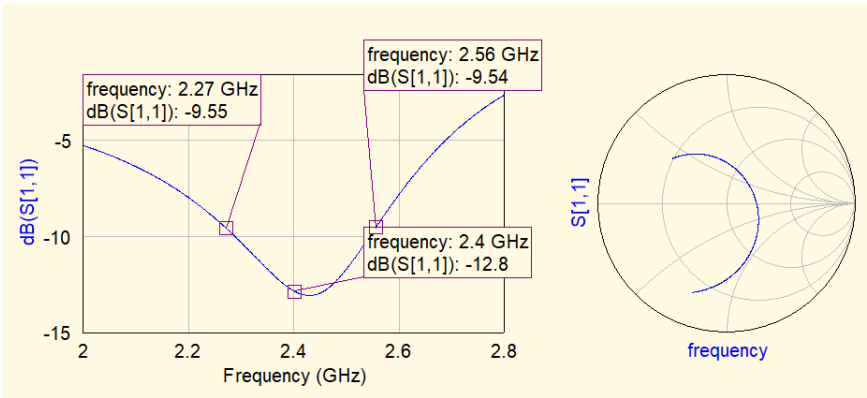

10. Smith Chart

Short shunt
same as open

$l_{short} = \frac{0.724\lambda}{2\pi}$

$l_{short} = 0.115\lambda$

$l = 14.4\,mm$

open shunt

$\beta = \frac{2\pi}{\lambda}$

$b_{open} = \tan(\beta l)$

$-1.13 = \tan(\beta l)$

$\beta l = \tan^{-1}(-1.13)$

$\beta l = -0.847\,rad$

$l = \frac{\beta l}{2\pi}\lambda = 0.365\lambda$

$l = 45.7\,mm$

$d = 0.222\lambda$

$= 26.5\,mm$

$X = 1.24 \times 50 = 61.8\,\Omega$

$L = \frac{61.8}{2\pi(2.4\times10^9)} \approx 4\,nH$

$C = \frac{1.13}{2\pi(2.4\times10^9)\times 50} = 15\,pF$

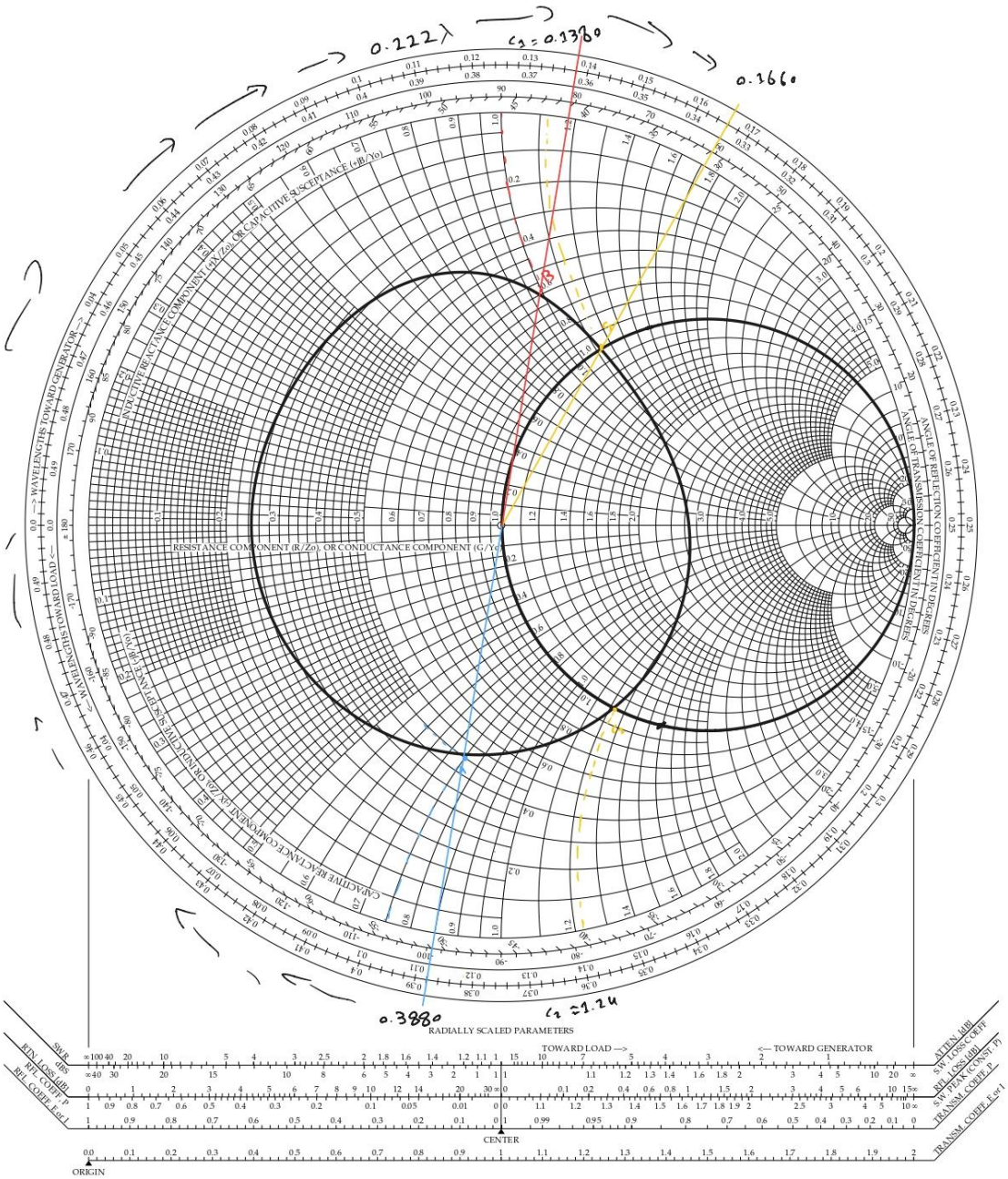

11. Comparison Between Methods

Three impedance matching methods were implemented at **2.4 GHz**: open shunt stub, short shunt stub, and lumped L-network.

The **lumped L-network** produced the best result, achieving **−65.5 dB** at 2.4 GHz with a **very wide bandwidth** (VSWR ≤ 2 from 2.03 GHz to 2.74 GHz). This indicates nearly perfect matching.

The **open shunt stub** achieved a minimum reflection coefficient of approximately **−12.7 dB**, providing acceptable matching but with a narrow bandwidth. Its performance is sensitive to frequency and open-end effects.

The **short shunt stub** showed similar behavior with a minimum $S_{11}$of about **−12.8 dB**. It provides slightly better stability than the open stub but still suffers from limited bandwidth.

Matching Method Results.

Simulations were performed for all three matching networks at 2.4 GHz. The following table summarizes their performance.

Method	S11(dB)	VSWR	Bandwidth (VSWR ≤ 2)
L-Network	-65 dB	1.00	710 MHz
Short Stub	-12.8 dB	1.59	290 MHz
Open Stub	-12.7 dB	1.60	430 MHz

12. Conclusion

The lumped L-network offers the best overall performance, while the open and short shunt stubs provide simpler but narrower-band solutions.