Design and Development of RotaDrawCT

Acuña, Conrad Sonny N., Antenor, Efren C., Dela Cruz, Jonalyn V., Paramio, Jim Clod S., Soriano, Nathalie, L.

Abstract: This study presents the design and development of a center table featuring an innovative rotating mechanism for hidden drawers. The project aimed to enhance functionality and aesthetics in furniture design, addressing the needs of modern living spaces. Using AutoCAD, a detailed 3D model was created to ensure precise dimensions and seamless integration of the rotating mechanism and hidden drawers. Durable materials, including marine plywood and solid wood, were used to construct the table, while Formica sheets in a dual-tone matt white and black finish provided a polished, modern look. The final prototype demonstrated smooth rotation, stability, and visual appeal. The rotating mechanism operated consistently with minimal resistance, and the hidden drawers opened and closed seamlessly. Key challenges, such as rotational stability and drawer alignment, were addressed through design refinements. User feedback highlighted the table's innovative design, smooth functionality, and suitability for contemporary interiors. This study successfully achieved its objective of creating a functional and aesthetically pleasing rotating center table. Future improvements may focus on enhancing usability and sustainability to meet evolving needs.

Index Term: RotadrawCT stands for Rotating Drawer Center Table

1 INTRODUCTION

Furniture design has evolved to meet the growing demand for innovative, multifunctional, and aesthetically pleasing pieces that complement modern living spaces. Among these, the center table plays a crucial role as both a functional and decorative element in interior design. However, traditional center tables often lack efficient storage solutions or rely on conventional drawer mechanisms that may not fully address user needs for accessibility and ease of operation. This research focuses on the design and development of a center table that redefines functionality through the integration of a unique rotating mechanism for hidden drawers. By enhancing the traditional drawer concept, the proposed table aims to provide effortless access to concealed storage spaces, combining practicality with modern engineering solutions. The rotating system will ensure smooth and efficient operation, offering seamless user experience while maintaining the structural integrity and elegance of the table. A key aspect of this study is achieving a balance between functional innovation and aesthetic appeal. The research emphasizes the use of advanced materials and precise engineering to create a table that not only meets practical requirements but also aligns with contemporary design trends. The ultimate goal is to produce a center table that serves as a visually striking centerpiece, blending form and function to enhance the modern living environment. Through this approach, the study seeks to contribute to the field of furniture design by introducing a novel solution that prioritizes user convenience, design sophistication, and practicality.

The inspiration for this research stems from the captivating beauty of a blooming flower. Much like how a flower unfolds its petals to reveal its intricate and hidden wonders, the design of our center table draws upon this natural phenomenon to create a sense of discovery and elegance. The blooming flower symbolizes transformation, innovation, and harmony, all of which are integral to the essence of this project. This concept has been translated into the table's unique rotating mechanism for hidden drawers, which mimic the graceful unfolding of petals. Just as a flower's bloom surprises and delights, the table's rotating system aims to provide an effortless and fluid user experience, revealing concealed storage spaces with sophistication and ease. By integrating this organic inspiration into the table's design, we aim to strike a balance between aesthetic appeal and functional innovation, creating a centerpiece that embodies the charm and utility of modern living. Through this nature-inspired approach, the research seeks to redefine traditional furniture design, emphasizing elegance, practicality, and a seamless connection between form and function.

2 LITERATURE REVIEW

Urbanization has intensified challenges in metropolises, particularly the reduction in living spaces. Wang (2013) observes that average living areas in cities are shrinking due to high population density and urban migration, with young people moving to urban centers for better opportunities and lifestyles. For example, in Beijing, the average living space per person is just 21 square meters, illustrating the severity of this trend. This reduction exacerbates urban issues like high housing costs, energy demands, and social inequality, creating an urgent need for innovative solutions to enhance urban sustainability and livability. One effective solution is transformable space-saving furniture, which optimizes limited living areas by offering adaptability and practicality. Examples include foldable beds, expandable tables, and modular shelving units, which enhance functionality and improve residents' quality of life. Additionally, such furniture contributes to sustainability by reducing the demand for larger housing units and minimizing environmental impacts. Wang's report examines the innovation, application, and future potential of these designs, aiming to highlight their critical role in addressing urban challenges and improving living conditions in modern cities.

According to Antal(2016), the furniture market is becoming more complex as consumer habits shift towards personalized, high-quality products. The focus is on creating a direct connection between the customer and individual pieces of furniture, emphasizing higher prices, quality, and emotional appeal. Functionality, aesthetics, design, and style are increasingly important in the competitive market. As consumers seek more tailored experiences, furniture manufacturers are adapting by prioritizing customization options and unique, high-quality materials. The shift from mass-produced, generic products to bespoke pieces reflects the growing desire for individuality and personal expression in home design. This change has driven companies to invest in innovative design processes and advanced craftsmanship, allowing them to meet the expectations of discerning customers. With a focus on distinct and stylish pieces,

furniture brands must also balance functionality with aesthetics to create products that are both visually appealing and practical, reinforcing their value in an increasingly competitive market.

According to Namicev and Petrovski(2019), wood is an ideal material for furniture production due to its superior physical, chemical, and mechanical properties, such as hardness, strength, elasticity, and resistance to rust. The choice of wood as the primary material significantly impacts both the design and quality of furniture, as a well-chosen material enhances the overall design and functionality of the finished product. Wood's versatility further strengthens its appeal for furniture production. Its natural grain patterns and diverse types, such as oak, maple, and walnut, offer a wide range of aesthetic possibilities, from rustic to modern designs. Additionally, wood's adaptability enables craftsmen to shape and customize it to meet specific design needs, whether through carving, bending, or laminating. This flexibility, combined with its durability and sustainability, ensures that wood remains a timeless choice that enhances the visual appeal, structural integrity, and longevity of furniture pieces, making it an unmatched option in the market.

Designing a structure that incorporates support columns, rotating mechanisms, and storage shelves creates a functional and accessible system for a dressing frame. The support columns provide a stable foundation for the overall structure, ensuring durability and balance. Meanwhile, the rotating mechanism allows users to conveniently access the dressing frame from different angles, enhancing usability. Additionally, the storage shelves are designed to optimize space and functionality, making the structure both practical and efficient (Putri et al., 2024). This concept can be effectively applied to furniture design, particularly for creating versatile and space-saving pieces. For instance, a rotating center table, bookshelf, or wardrobe could utilize similar mechanisms to offer easy access to stored items from multiple sides. Sturdy support columns would ensure the furniture's stability, while the rotating mechanism would enhance convenience and functionality.

3 OBJECTIVE OF THE STUDY

The objective of this research is to design and develop a center table that enhances both functionality and user experience through innovative drawer mechanisms. The table will be equipped with a rotating system that allows for smooth and efficient opening and closing of concealed drawers, providing convenient storage options. By focusing on improving traditional drawer mechanisms, the research aims to create a mechanism that simplifies operation, ensuring effortless access to the drawers.

The study seeks to balance the functional improvements with aesthetic considerations, ensuring that the enhancements do not compromise the overall design of the table. The goal is to create a piece of furniture that not only performs well but also maintains an elegant appearance that suits modern interior spaces. The research will explore new materials and engineering solutions that allow for seamless integration of form, function, and practicality, ultimately producing a novel center table that serves as both a functional storage solution and a visually appealing centerpiece.

Additionally, the study aims to draw inspiration from nature, particularly the graceful blooming of a flower, to incorporate a design philosophy that emphasizes organic movement and elegance. This objective seeks to create a table that not only meets functional and aesthetic requirements but also evokes a sense of wonder and innovation, offering users a uniquely engaging experience with their living space.

This research will benefit a wide range of individuals and groups, particularly homeowners, interior designers, and furniture manufacturers. Homeowners will find value in the innovative design of the center table, which offers both functional storage and aesthetic appeal, making it an ideal addition to modern living spaces. Its unique rotating mechanism for concealed drawers provides a practical solution for organizing items, enhancing convenience and reducing clutter in homes. Interior designers can utilize this piece to elevate the visual and functional elements of their projects, offering clients a stylish and practical furniture option that aligns with contemporary design trends. Additionally, furniture manufacturers will benefit from the research insights, as the study introduces advanced materials and engineering solutions that can inspire future product developments and improve production processes. Overall, this research seeks to address the needs of various stakeholders by delivering a center table that blends innovation, utility, and design sophistication.

.

4 MATERIALS AND METHODOLOGY

4.1 Materials

The main body of the center table is constructed from a single piece of marine plywood (4'x8'x3/4"), a durable and water-resistant material suitable for furniture. The plywood is cut according to the specified design (fig. 1 and tab. 1) to create the top surface, sides, and hidden drawers. Marine Plywood is chosen for its strength and moisture resistance, ensuring long-term durability.

Figure 1. Plywood Cuts

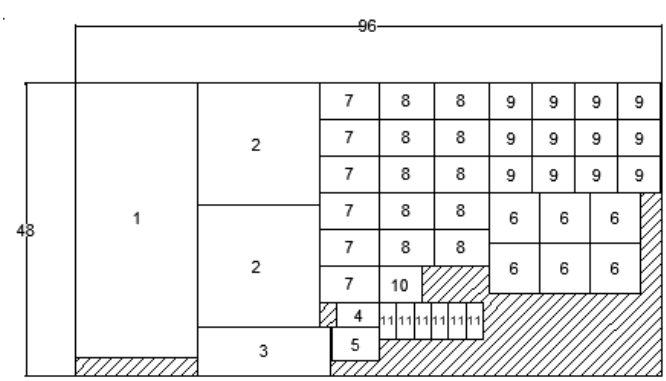

Table 1. Sizes, Description and Quantity

No.	Size	Description	Quantity
1	20”x45”	Base of table	1
2	20”x20”	Table top (left and right)	2
3	21 ¾”x8”	Center table top	1
4	7”x4”	Rear body of center table top	1
5	7 ¾”x5”	Front body of center table top	1
6	8 ¼”x8 ¼”	Base of drawer	6
7	9 ¾”x6”	Side of drawer 1	6
8	9”x6”	Side of drawer 2	10
9	7”x6”	Side of drawer 3 and 4	12
10	7”x6	Support of rear body	1
11	2 13/16”X6”	Side of Drawer 5	6

The stand is made from four pieces of wood, each measuring 1"x2"x9', cut to the specified dimensions (fig.2 and table 2). These provide the necessary structural support for the table and allow for the central rotating mechanism to be securely mounted.

Figure 1. Solid wood Cuts for Stand

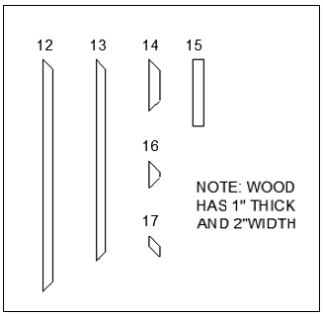

Table 2. Sizes and Quantity

No.	Sizes	Quantity
12	1”x2”45”	2
13	1”x2”x39”	2
14	1”x2”x10”	4
15	1”x2”x5”	4
16	1”x2”x4”	4
17	1”x2”x13”	16

Additional Materials for Construction. Finished Nails (1-inch and 2-inch) 1-inch finished nails are used to fasten smaller parts of the table, such as the drawer compartments, while 2-inch finished nails secure the larger parts, such as the base and side panels. The nails help ensure a strong, clean connection with minimal visible fasteners. Stickwel Adhesive Stickwel adhesive is used as a fastener to bond wooden components, ensuring a stronger and more durable connection than nails alone. The adhesive also eliminates the need for additional screws in some areas, providing a smooth and seamless finish. Rotating Mechanism Components 2 pcs of 5 cm diameter bearing: These bearings facilitate smooth rotation of the tabletop. The bearings are mounted at the left and right centers of the base to support the rotating motion, ensuring minimal friction and easy turning. 1 ½" x 1 ½" x 7" Solid Wood for Center Support: A solid wood block is used as a central support for the rotating mechanism, providing structural integrity and stability during rotation. Wood screws are used as fasteners to secure the tabletop to the base, as well as to mount the central support mechanism, ensuring firm attachment and stability. Round Bar (for Dowel Mechanism) A round bar is used as a dowel to hold the rotation mechanism in place and to enable the drawers to open smoothly. The dowel ensures that the drawers remain aligned during use and do not misalign during rotation. Finishing Touches: Formica (Matt White and Matt Black) The final touch is provided by Formica sheets in matt white and matt black. These are used to cover the table surfaces, giving it a sleek, modern appearance while also offering a durable, easy-to-clean surface. The choice of two contrasting colors (white and black) enhances the aesthetic appeal of the table. Rugby Adhesive for Formica Rugby adhesive is used to firmly attach the Formica sheets to the table's plywood surface. This strong adhesive ensures the Formica does not peel off and remains securely in place over time. Edge Banding Edge banding is applied to the exposed edges of the plywood and Formica-covered surfaces, providing a smooth finish and preventing damage to the edges. The edge banding helps maintain the structural integrity of the table and enhances its overall appearance.

Table 3. Materials

Materials	Quantity
Plywood	1 pc
Wood 1” x 2” x 9’	4 pcs
Stickwel	½ kilo
Nail finish 1”	½ kilo
Nail finish 2”	½ kilo
Bearing	2 pcs
Wood 1 ½” x 1 ½” x 7”	2 pcs
Edging matt white	9m
Edging matt black	6m
Formica matt white	1 pc (4’ x 8’)
Formica matt black	1 pc (4’ x 4’)
Rugby	3 bottles
Wood Screw	10 pcs
Sandpaper 100 grit	2 pcs
Sandpaper 150 grit	2 pcs

4.2 Methodology

The development of the rotating center table begins with the conceptualization phase, where the overall structure, including the rotating mechanism and hidden drawers, is envisioned. The design is created using AutoCAD, a 3D design software, which allows for detailed modeling of the table components. The software enables precise measurement of dimensions and accurate representation of the rotating mechanism and drawer integration. The table's base, rotating top, hidden drawers, and supporting structure are modeled in 2D and 3D to ensure proper fitting and functionality. The rotating mechanism is incorporated into the

design, ensuring that the drawers open smoothly while the table remains stable during rotation. The design is continuously revised and optimized in AutoCAD to ensure all components align with functional and aesthetic requirements (fig. 3,4,5,6).

Figure 3. Working Drawing (Table top)

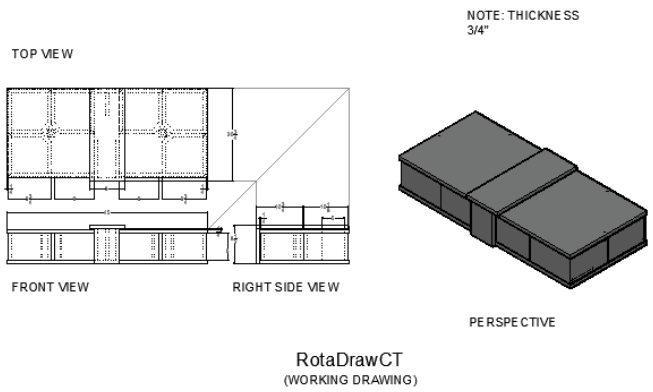

Figure 4. Working Drawing (Stand)

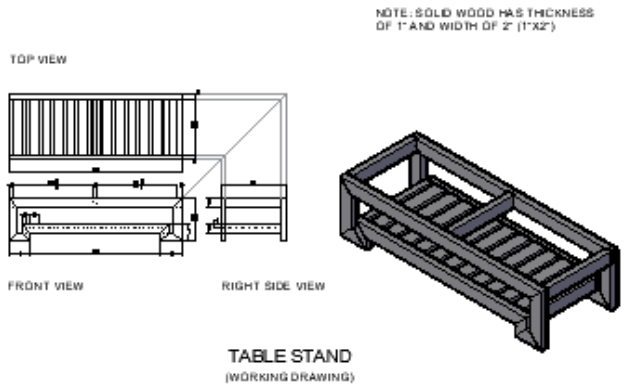

Figure 5. Perspective view of the RotadrawCT

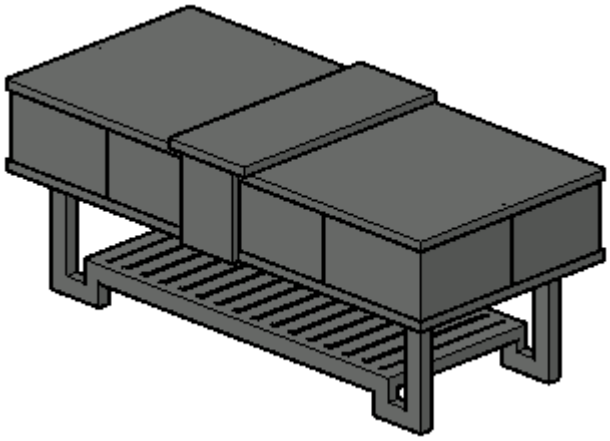

Figure 6. RotadrawCT fucntion

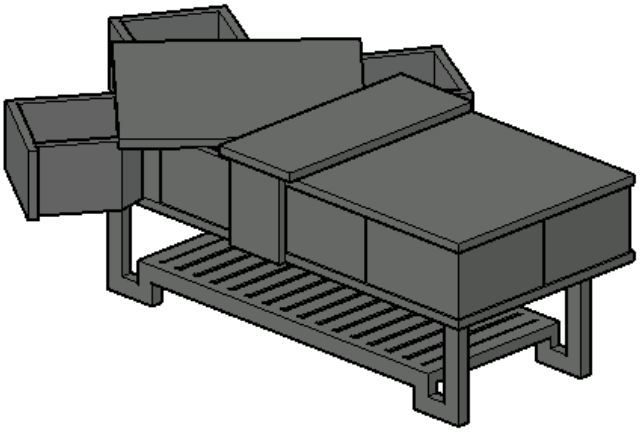

This study Utilized the Developmental Research The center table is first conceptualized and modeled in AutoCAD to define all dimensions and ensure all parts fit together correctly. This step includes designing the rotating mechanism and the hidden drawers, allowing for adjustments and modifications before physical construction begins. The design and development of the RotaDraw CT consisted of several components. The foundation of the table was a 20” x 45” x 3/4” base (1). The left and right table tops were made from 20” x 20” (2), while the center table top measured 21 ¾” x 8” (3). The rear body of the center table top measured 7” x 4” (4), and the front body measured 7 ¾” x 5” (5). The base of the drawer was 8 ¼” x 8 ¼” (6). The sides of the drawers were constructed as follows: Drawer A measured 9 ¾” x 6” (7), Drawer B measured 9” x 6” (8), and Drawers C and D each measured 7” x 6” (9) and the side of Drawer E measured 2 13/16” x 6” (10). Additionally, the support for the rear body measured 7” x 6” (11). All components were made of plywood with a thickness of ¾” (*fig. 1 and tab. 2*). Precision cutting ensures that all parts fit perfectly together and align with the design. The stand of the table consisted of solid wood pieces cut to the following dimensions: 1” x 2” x 45” (12), 1” x 2” x 39” (13), 1” x 2” x 10” (14), 1” x 2” x 5” (15), 1” x 2” x 4”(16), and 1” x 2” x 13”(17) *(fig. 2 and tab. 2)*.The assembly process utilized 1-inch and 2-inch finished nails, along with Stickwel adhesive, for added strength and durability. A round bar dowel was incorporated into the design to support the rotation mechanism and facilitate the drawer opening system (18). For mounting the rotating mechanism, 5 cm diameter bearings were strategically positioned at the left and right centers of the table, ensuring smooth and efficient rotation of the tabletop (19). The center support, made of solid wood and measuring 1 1/2" x 1 1/2" x 7", was securely fastened using wood screws to provide additional stability to the rotating mechanism. (20) *(tab.3)*. After the table's structure was assembled, Formica sheets were applied using Rugby adhesive to enhance the table's appearance and protect its surface. Edging was carefully applied to conceal all exposed edges, resulting in a clean and polished finish. A thorough final inspection ensured that the drawers opened and closed smoothly and that the rotation mechanism operated as intended. This methodical approach ensured the creation of a functional, durable, and aesthetically pleasing rotating center table with hidden drawers, perfectly suited for modern living spaces.

Table 3. RotaDraw CT Mechanisms

No.	Description	Quantity
18	Round Bar Dowel 1 ½”x10mm dia.	6
19	5cm dia. Bearing	2
20	Solid wood support 1 ½”x1 ½”x7”	2

5 RESULT AND DISCUSSION

The rotating center table was successfully conceptualized, designed, and developed through a multi-step process that combined advanced software tools with precise engineering, ensuring a functional, durable, and visually striking final product. By utilizing AutoCAD for the design phase, the project benefited from precise measurements and detailed 3D modeling, allowing for seamless integration of the rotating mechanism and hidden drawers. This careful planning and execution ensured that every component was thoughtfully aligned with the overall functionality and aesthetic goals of the table, facilitating the successful realization of the concept.

The prototype demonstrated smooth, stable rotation, contributing to a user-friendly experience while maintaining aesthetic integrity. Marine plywood was selected for the table’s core structure, providing both water resistance and structural durability. This choice of material ensured that the table could withstand daily use while remaining functional and sturdy. Additionally, solid wood was used to reinforce the rotating mechanism, ensuring long-term stability, reducing the risk of wear and tear, and supporting smooth and efficient movement. The combined materials contributed not only to the table's strength and durability but also to its ability to support the unique rotating functionality without compromising its overall form.

To complement the functional components, the table was finished with a matte white and black Formica surface, which enhanced its sleek, modern aesthetic. This finish was chosen for its ability to withstand the rigors of everyday use, providing resistance to scratches, stains, and general wear. It also proved to be easy to clean, maintaining its polished appearance throughout various usage and cleaning tests. The choice of Formica, along with edging, further emphasized the modern, minimalist design, aligning with current interior design trends and enhancing the visual appeal of the piece.

The rotating mechanism itself was engineered with precision, incorporating bearings and dowels to ensure smooth, frictionless movement. This design allowed for the seamless operation of the drawers, which opened and closed with minimal resistance, ensuring a smooth user experience. The hidden drawers, integral to the design, functioned as intended, providing accessible storage without misalignment or difficulty in operation. The rotating system maintained consistent speed, offering a balanced and effortless user experience, while the drawers provided a practical solution for organizing personal items in a discreet, visually appealing manner.

Moreover, the table's dual-tone finish and edge banding contributed not only to its modern design but also to its adaptability in various interior spaces. Feedback from users and designers alike confirmed the table’s compatibility with contemporary home settings, where both functionality and aesthetic appeal are highly valued. The table’s minimalist design allows it to serve as both a functional storage solution and a striking centerpiece in living rooms, offices, or other modern interiors.

Overall, this study successfully met its objective of creating a rotating center table that balances innovation, utility, and elegance. The table integrates practical storage with advanced engineering solutions, ensuring both user convenience and design sophistication. By combining smooth functionality, high-quality materials, and a refined aesthetic, the prototype offers a modern, multi-functional piece of furniture that enhances any contemporary living space. This project not only demonstrates the potential for innovation in furniture design but also sets the foundation for future developments in multifunctional furniture solutions, offering new possibilities for designers and manufacturers to explore.

6 CONCLUSION

This research successfully achieved its objective of designing and developing a rotating center table that blends innovative functionality with aesthetic appeal. By employing AutoCAD for precise design and measurement, the project ensured seamless integration of the rotating mechanism and hidden drawers. The resulting prototype demonstrated smooth, frictionless rotation, stability, and a refined, modern aesthetic. The careful selection of materials-marine plywood for durability and water resistance, and solid wood for reinforcing the rotating mechanism-contributed to the table’s overall strength and longevity.

The table's surface was finished with a matt white and black Formica, which not only enhanced its modern, minimalist design but also proved durable under usage and cleaning tests. The rotating mechanism, which utilized bearings and dowels, functioned effortlessly, ensuring that the hidden drawers operated smoothly and without misalignment. This resulted in a product that successfully combined both functionality and elegance, offering users a practical yet sophisticated solution for modern living spaces. The dual-tone finish and edge banding added a contemporary touch that was well-received in terms of design compatibility with contemporary interiors. The positive feedback further validated the table’s potential to serve as both a functional storage solution and a visually appealing centerpiece for modern homes.

Overall, this study highlights the potential for innovation in furniture design by demonstrating how advanced materials, engineering solutions, and creative design can come together to create a piece that not only meets practical needs but also elevates the aesthetic quality of modern interiors. The success of this rotating center table prototype marks a significant contribution to the field, offering valuable insights into the integration of functionality and design sophistication in multifunctional furniture. This research paves the way for future advancements in furniture development, with the potential to inspire further exploration of innovative, user-centric design solutions.

7 RECOMMENDATIONS

To improve user accessibility and convenience, it is recommended to slightly increase the height of the table. This adjustment would provide easier access for individuals with mobility challenges or those who have difficulty bending down, allowing them to comfortably reach and view the items stored beneath the table. Additionally, raising the table height could accommodate various seating arrangements, making it more versatile for different users and environments.

Incorporating LED lights beneath the table is recommended to enhance both functionality and aesthetics. The added lighting would illuminate the storage area, making it easier for users to locate items, particularly in low-light conditions or evening settings. Furthermore, the lights could contribute to the overall ambiance of the room, offering a subtle yet effective design element that complements the table's modern look.

For improved user convenience and efficiency, it is recommended to redesign the rotating drawers so they open simultaneously rather than sequentially. This modification would streamline the user experience by providing quicker and more accessible access to stored items, eliminating the need for users to open each drawer individually. This change would be particularly beneficial for individuals seeking a more seamless interaction with the table, especially in situations where speed and convenience are important. By enabling both drawers to open at the same time, the table's functionality would be significantly enhanced, making it a more practical solution for modern living spaces.

REFERENCES

Danish, A. G. (2023, October 18). Embrace the beauty of blooms. LinkedIn. https://www.linkedin.com/pulse/embrace-beauty-blooms-a-g-danish-sojze

Wang, S. (2013, April 😎. Library home. Open Collections. https://open.library.ubc.ca/soa/cIRcle/collections/undergraduateresearch/52966/items/1.0103142

Antal, M. R. (2016). OpenURL connection. EBSCO. https://openurl.ebsco.com/EPDB%3Agcd%3A7%3A3727735/detailv2?sid=ebsco%3Aplink%3Ascholar&id=ebsco%3Agcd%3A114349616&crl=c&link_origin=scholar.google.com

Namichev, P., & Petrovski, M. (2019). The impact of the application of wood on the technological preparation for furniture manufacturing. Journal of Process Management and New Technologies. https://scindeks.ceon.rs/Article.aspx?artid=2334-735X1903001N

Putri, S., Bahri , N., & dandi, Y. (2024, November). Analysis of the effectiveness of rotating shelf design on dressing frame at Graha Kindergarten, West Bandung. Paperity. https://paperity.org/p/358048636/analysis-of-the-effectiveness-of-rotating-shelf-design-on-dressing-frame-at-graha