“GREEN ICT TO SAVE HIMALAYAS" A SIMULATION AND GAMING APPROACH

LATHA IYER, SHANKAR NARASIMHAN, BANGALORE INDIA
Lathaln2003@yahoo.com, Shankarkn@yahoo.com

Keywords: Himalayan Ecosystem, Artificial Neural Network (ANN), Eco-Modeling, Global Mountain Biodiversity Assessment (GMBA), ICMOD- International Centre for Integrated Mountain Development (ICIMOD), Convention on Biological Diversity (CBD), Multilayer Perceptron(MLP), Mean Squared Error(MSE), Extensible Markup Language(XML), Convention on Biological Diversity (CBD)

Abstract: The increasing pressure on sustenance of global ecosystems and climatic changes has lead to habitat fragmentation and will cause an eventual loss of biodiversity. The main objective of this study is to analyze and examine one of the world’s diverse ecosystem the Himalayan Region using gaming and simulation and Artificial Neural Network approaches for ecological sustenance. This is to provide the conservationists easier data access through ICT mechanisms, which help to identify similarities and differences in species, their habitat patterns and degradation cycles. An integrated approach of using Artificial Neural Network coupled with gaming techniques is evaluated and presented in this paper to improve the network results and accuracy of prediction.

1. INTRODUCTION

Mountains are among the most fragile environments on Earth, but, at the same time, are also rich repositories of biodiversity and ecosystem services, and the source of much of the water that sustains life on the planet. In spite of considerable international goodwill, mountain areas continue to face enormous pressures, the origins of which can be traced back to changes taking place globally. The direct drivers of environmental change in mountain areas include climate change, changes in land use and land cover and species introduction/removal; while the indirect drivers include demographic, economic, and socio-political changes. Many of these drivers adversely affect biodiversity conservation, ecosystem services, and the wellbeing of the people whose lives and livelihoods derive from the mountain areas. The effects will also eventually spread to the downstream river basins where they will have global implications.

Today there is an increasing appreciation of the rich biodiversity that mountain areas render to the survival of human-kind. In 1992, the Convention on Biological Diversity (CBD) put forth global objectives on the conservation of biological diversity, on the sustainable use of its components, and on the fair and equitable sharing of the benefits arising from genetic resources. The Conference of Parties in 2004 adopted an ‘ecosystem approach’ to biodiversity conservation and management, which included a Programme of Work on Mountain Biodiversity. A recent advance is in generating information and knowledge on mountain biodiversity complements these global agreements. The mountain biodiversity programme aims to implement the CBD to reduce significantly the loss of mountain biological diversity by 2010 at global, regional, and national levels

Biodiversity in a huge mountain system such as the Himalayan Ecosystem representing 8 countries, 10 big river systems, and about 200 million people in the mountains, and perhaps more than 1.3 billion people in the surrounding lowlands extending from west to east over a distance of about 3,500 km, Without solid knowledge about climate and water as basic elements for soil formation and vegetation growth, for land use and cover, and especially for biodiversity, we cannot develop scenarios about potential impacts of climate change and extreme events, and we have no concrete answers in the context of mitigation and adaptation mechanisms. There is a lack of necessary basic and comparable data taken over a long period and in reliable series throughout this mountain system. How should we tackle biodiversity conservation and management in such a huge mountain system? How should we address the urgent need to improve our knowledge?

With focused studies at selected mountain test sites across Himalayan Region we could improve our knowledge enormously. At these test sites we need thorough knowledge and long-term monitoring of all aspects of the different altitudinal belts based on essential data about climate, water, biodiversity, and ecosystem services. This knowledge will be essential for planning conservation and development strategies, as well as for integrating these stations into a global network called the Global Climate Observing System. The data available currently are not sufficient for modelling and projecting into the future. Based on the knowledge acquired, the potentials and limitations could be evaluated, and certain changes in the natural and human systems could be integrated through tools and used for projection into the future, e.g., what are the consequences of melting glaciers, shorter periods of snow cover, changing precipitation and runoff, and impacts on vegetation and biodiversity. This knowledge should exist in a so-called test site, so that new information from regional knowledge centers can be reflected on a local scale and analysis and observations on a local scale can be transmitted to regional institutions.

GMBA aims to explain and synthesize the knowledge on biodiversity in the high mountains. The current focal area of GMBA is on developing tools for quantitative assessments of mountain biodiversity.

2. SCOPE OF STUDY AND CASE

In this paper we have analyzed the forest vegetation of Mandhala in the Shivaliks or Lesser Himalaya present in Himachal Pradesh.

The elevation of Mandhala region is in an elevation of 550 to 1075 m having an average rainfall of 1000 mm. The mean temperature in winter is 18°C and in summer is 25°C. The climate is sub-humid, sub-tropical being in the foothills of the Himalayas. The soil is formed on soft sandstones, poorly bedded conglomerates, brownish clays; flood plains are developed on alluvium derived from hills. This has plains and moderately steep to very steep slopes. The drainage systems consist of much small drainage which finally merges into the Ghagar River. The data has been collected only from 1965 and programs having failed to bring back the forest cover in the region. The rainfall has decreased from 1467.8 mm in 2003 to 1085.4 in 2006. The average is 1177.3 and the % decrease is .8% per year. The net return in converting it back into forest land has also not worked out. The tree density for individual tree species ranged from 0.001 to 2.23/100 sq. m. The pattern of species distribution was contiguous for a majority species; nonetheless it was random for Azadirachta indica, Acacia catechu, Acacia arabica, Cassia fistula and Flacourtia indica. This degradation of forest cover and land use compared to watersheds in the upper Shivaliks is the highest in Mandhala.

These factors have led us to bring out a predictive model that could bring back forest cover to the particular area.

3. OVERALL APPROACH FOR PREDICTIVE MODELING”

The conventional approaches to ecosystem distributions are ground surveys, aerial photography, telemetry and satellite tracking. As most of these methods involve much field surveys, monitoring at national and regional scale, cannot realistically keep pace with the rate of change in the landscape and requires a substantial amount of capital, time and manpower. Predictive modelling techniques coupled with statistical tools and approaches such as ANN and DirectX technologies are currently being used to evaluate and analyze the ecosystems. In this context, predictive modelling approach makes use of the limited data available to come up with potential areas suitable for conservation of habitats. Predictive habitat distribution modelling provides a tool to study the relationship between distributions of species given a set of environmental conditions and also provide data for future sustenance.

4. ANN APPROACH

Among the Artificial Intelligence techniques available, ANN can be defined as highly connected array of elementary processors called neurons and is capable to perform nonlinear modeling and adaptation. Neural networks attempt to learn by themselves the functional relationship between system inputs and outputs.

The ANN model used here is the (multilayer perceptron) MLP. The multilayer perceptron (MLP) uses the Gradient descent learning method. It is the most widely used principle for ANN training. The reason is that trivial computation is required to implement this method, and the fact that the gradient can be computed with local information. The principle of gradient descent learning is that the weights are moved in a direction opposite to the direction of the gradient. The gradient of a surface points to the direction of the maximum rate of change.

Simplistic approach has been used here to gather data from the ANN model via the excel sheets. The benefits

in this are many. Data can be modified to the required formats with speed & precision. Data collection in the field can be directly entered in a field survey directly. Reports can be generated easily using a tool. Export of the Output of Data can be done in various formats including .csv, .xml, and .mdb. Column & row restructuring based on data can be done with ease.

5. PROPOSED ARCHITECTURE

5.1 Architecture Diagram

The objective of the proposed architecture (Figure 1) is to recognize the above factors from the training data and predict the load accordingly. Thus a suitable architecture along with appropriate inputs is needed. The data collected is in the GMBA dataset format. The GMBA initiative for a mountain biodiversity database specifically aims to collect such sets in order to prevent their destruction and initiate a first global assessment of the primary causes of mountain biodiversity patterns.

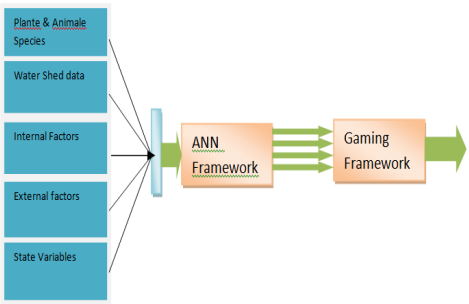

Figure 1

5.2 Inputs

INPUT Scenerios			
1. Plante & Animale Species	2. Water Shed Data	3. Internal Factors	4. External Factors
Kingdom	Vegetation layer	Soil	Climate change
Division	species diversity index(%)	Errosion	Over population
Class	density (sq.mts)	Rainfall	Over cultivation
Order	ratio (%)	Terrain	Grazing
Family		Height	Pollution
Genus			Human Infringment
Species			
Unique			
Count per region			

Figure 2 – Inputs

The environmental factors include the soil factors like clayey, Loamy, Sandy etc (Figure2). The internal factors like soil erosion over the years and the change in terrain are also factors to be considered. External factors like climate change can increase the temperatures resulting in species loss. Over population, Over Grazing, Pollution and Human Infringement are also factors to be considered for modeling. State data will be used for all the main data patterns

5.3 Outputs

There are two outputs here. i) The sorted output from the ANN model is the input to the gaming engine. ii) Once a game is being played the output of the games is the periodical output of the scenarios that the game is being played in. Output should be tabulated, state variables graphed and intermediate parameter and rate values monitored to ensure that they are realistic during simulations. One also should check that the model behaves as expected in situations for which the analytical solution is known. The outputs can then be analyzed for predictive analysis after the game has been played based on parameters that will affect the ecosystem.

6. SOLUTION METHODOLOGY AND PROTOTYPE DETAILS

6.1 Data Collection

The internationally accepted eight-kingdom approach was followed in the present system and most names used in the globally accepted database, 'Species 2000' were considered as standards as far as kingdom, phylum/division, class, order, and family. While names of genus and species already available in the 'Species 2000' are considered as standards and those not yet available for confirmed taxons of the region are added to the standards database

Data has been collected from government organizations like Natural Resources Data Management System (NRDMS), Department of Science and Technology (DST) & Ministry of Science and Technology. Data from 2000 has been analyzed but the latest data (2008) has been kept for predictive modeling and gaming approach. Wherever needed the older data is used for predictive modeling. The Plant & Animal species of the Mandhala region has been considered for the study.

6.2 Creating the Sample Set

On raw analysis of the data it was found that few species were not classified as defined by the standard. For example the kingdom and the division were not defined for a certain class of species. As a result ordering could not be done based on species, genus or family. On a deep dive analysis of the raw data based on the inputs from the earlier studies it was found that ordering at a class and division approach could possibly yield better results.

6.3 Data Preparation for training ANN

The size and ordering of the training set is of fundamental importance to the practical usefulness of the network. If the training patterns do not convey all the characteristics of the problem class, the mapping discovered during training only applies to the training set. Another aspect of proper training is related to the relation between training set size and number of weights in the ANN. If the number of training examples is smaller than the number of weights, one can expect that the network may "hard code" the solution. When there is a big discrepancy between the performance in the training set and test set, there is deficient learning.

In the present case using the class and division approach for training the ANN model 278 rows were considered out of which 190 was training data, 50 as test data and the remaining as cross validation data.

6.4 Normalization

Data normalization is an important stage for training the neural network. The data is normalized in such a way that the higher values should not suppress the lower values. Columns have been sorted based on Uniqueness, Species, Genus and Family for the ANN model to give the correct results.

6.5 Prototype

Neurosolutions has been used to create a working prototype of the ANN model. This is a handy tool to calculate data from excel and generate the results in the excel format for simulation. The data in excel format is then exported to XML format which a gaming engine can handle. The gaming engine requires data during the generation of scenarios during gaming.

The software chosen for gaming is DX Studio which is a free ware & commercial product. This offers a complete tool set for creating 3D based products from games to simulators which can all be easily published straight from the editor. By using Active X technology you can add the DX player as a component in your C#, C++ application. DX Framework is a framework connected to the DX studio. The game once designed can also be networked such that multiple players can use it. DX Studio can handle unlimited size terrains with high levels of details.

- Large Terrain and Vegetation system
- Dense Vegetation system
- Multi texture shader material
- Terrain streaming
- Mesh Based system
- Light and Shade & Speed
- Data is loaded in XML format.

7. Results with ANN (Tables & Graph)

The tests were initially conducted for 1 run and 30 runs based on 70% training data, 20% testing data & 10% cross validation data. An MLP was built after 30 runs having 1000 epochs. The tests can be discussed based on the testing & cross validation data, number of test runs, sensitivity of means and desired output (Figure 3).

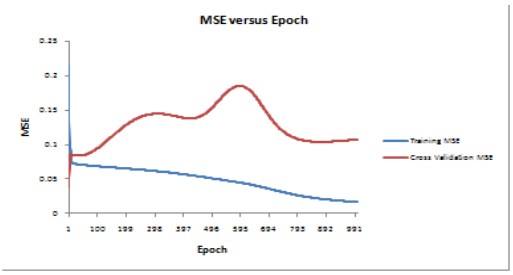

Best Networks	Training	Cross Validation
Epoch #	1000	1
Minimum MSE	0.016550932	0.038111397
Final MSE	0.016550932	0.107467021

Figure 3

During the test conducted with 1 run, the mean squared error (MSE) of the cross validation and training data is high. The difference in MSE between the training and cross validation data is around .08 % which is high. When the MLP is built, inaccurate results are expected to occur and this can relate to data mismatch and incorrectness in the ANN modeling.

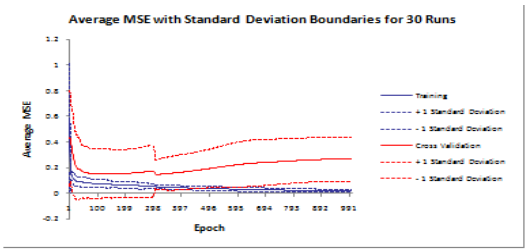

All Runs	Training Minimum	Training Standard Deviation	Cross Validation Minimum	Cross Validation Standard Deviation
Average of Minimum MSEs	0.016533755	0.010139221	0.072241603	0.042002536
Average of Final MSEs	0.016533755	0.010139221	0.265445933	0.171197794

Best Networks	Training	Cross Validation
Run #	9	12
Epoch #	1000	654
Minimum MSE	0.006755703	0.013049026
Final MSE	0.006755703	0.018023542

Figure 4

When the test was conducted with 30 runs (Figure 4), the mean squared error (MSE) of the cross validation and training data got was low. The difference in MSE between the training and cross validation data is around .011 % which is low compared to the above data. When the MLP was built the data was more accurate than the previous run. The curve obtained for the training MSE is a smooth curve and as can be seen the curve is a smooth curve after multiple re-runs.

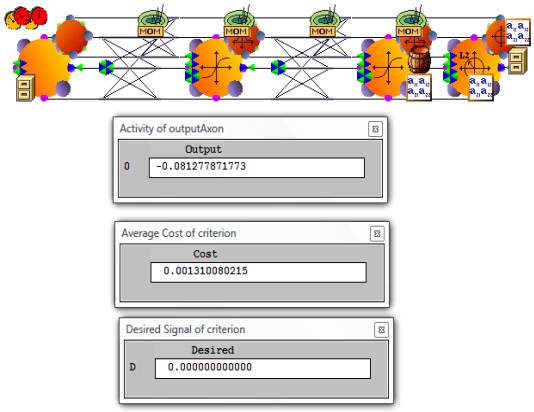

Figure 5

From the above MLP generation (Figure 5) we see that the difference between the Average cost of criterion and the desired signal of criterion is very less. This leads us to the fact that if the testing, training data is 40% and 40% and the cross validation data is 20% the output will tend to be more accurate. The number of iterations and reruns with the data also has to be high. Noise data has been reduced which can be seen from the above figure in the training data reruns with 4 hidden neurons.

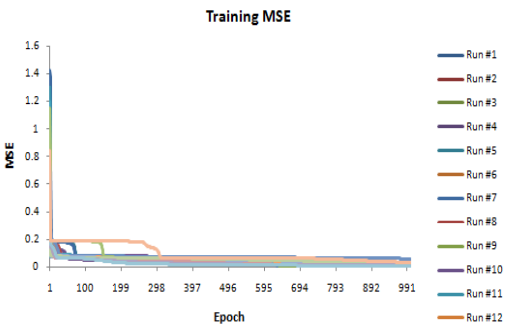

Figure 6

The above figure (Figure 6) gives the curves based on the MLP for 30 runs. The curve obtained after 30 runs is a smooth curve which is nearer to the desired mean output. Based on the 30 runs and 1000 epochs the curve for subsequent runs became smoother and tended towards 0.

8. THE GAMING APPROACH

The above results and modeling can further yield consistent results using gaming approach. The data from ANN is fed into the gaming engine using various scenario and combinations. The size of the data set to be input into the system has to be high to reduce the error and deviation. For the desired output to be a smooth curve, data should be sufficient and randomized. Cleansing of data will lead to a better desired output.

This data can be fed into the gaming engine from a database. There are common frameworks available to do this or a custom framework can be created for the ecosystem for easy reuse. A table structure with state variables matching the data collected to the data format of the game engine can be constructed. Once the data is entered, multiple scenarios for the same terrain can be created for different users. The framework uses classes for importing and exporting data. Based on the game simulation time and scenarios, data can be got based on the time spans (e.g. during creation of game, time for a month can be specified) played by user. Data close to the real time data can then be obtained. This can lead to the prediction of the changes in ecosystem. Predictive approach helps in proactive planning of biodiversity in the region.

8.1 Test bed

There are many tools available to create the gaming prototype. DX studio was chosen as the tool to create the test bed. The system includes both 2D and 3D layout editors, and allows JavaScript control of scenes, objects and media in real-time. This editor can be used to build interactive layers and sequences, which are combined to produce a complete interactive document. The top level editor can be used just to drag and drop scenes together at a high level, or can 'drill down' to edit 3D and 2D scenes. This can be easily connected to mySQL, MS-Access & MS-SQL Server databases. The files produced use standard XML to describe the entire scenes. The files also contain all the resources needed to display the 3D world, compressed into the same file using standard ZIP compatible algorithms. The end product can be packaged into and exe or zip.

8.2 Game Design

The gaming approach constitutes a gaming engine which contains a set of program and subroutines (Figure7). This engine uses an iterative genetic algorithm and MLP for prediction as depicted in the diagram below. The genetic algorithm is a probabilistic search algorithm that iteratively transforms a set of

mathematical objects, each with an associated fitness value, into a new population of offspring objects using the Darwinian principle of natural selection and using operations that are patterned after naturally occurring genetic operations.

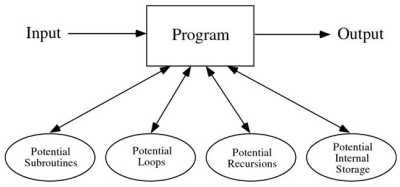

Figure 7

The game is designed keeping in mind that a player will have limited time to play a game. A game played for 2 hours will be divided into 2 years. 15 minutes will then come to the 3rd month in the given year.

A player has the option to play the games based on a given defined set of scenarios or a general scenario generated from the gaming engine which will have randomized sample of data from all the above four scenarios. The data in the output tables can then be downloaded into excel files and reordered in the desired format and a predictive model can be established. The data will be saved every 15 minutes during game play or when the game is saved. Data has to be manually exported from the output tables & sorted in the required format to feed into the ANN.

8.3 Database & Scenarios for the Prototype

The inputs from the ANN model and the Outputs from the gaming engine will be used in the database. Factors described in the inputs and outputs of the ANN model have to be considered. The database will consist of 3 types of tables i) Input tables containing data needed for the environmental prediction. ii) Auxiliary tables to support the main data. iii) Output tables which will contain data derived from the game engine during game play (Figure 8).

Input tables	
Plant_species	Terrain_area_data
Animal_species	Terrain_species_data
Vegetation_data	Terrain_vegetation_data
Soil_type_area	Species_ratio
Rainfall_data	Species_grid_density
Climate_data	

Figure 8

The plant and animal species data is derived from the neural analysis results. The vegetation in the region will be sorted based on the grid to be created in the game and external and internal factors. The soil type, rainfall and climate of the region based on grids will also have to be populated with data. This will give a complete picture of an ecosystem which will be similar to the Himalayan ecosystem that we are trying to create.

The Terrain data is required to create a simulated test environment similar to the Shivaliks. Boundary conditions will be defined in the species ratio and grid density tables. Temporary tables will be created for parsing of data.

Output Tables
O_Scenario_runs
O_Plant_data
O_Animal_data
O_Terrain_data
O_Grid_ratio

Figure 9

The output tables (Figure 9) will contain the data for relevant gaming scenarios that will be sent at regular intervals of 15 minutes or when the game is saved. This will contain data of Scenario runs, Plant & Animal species data and Terrain data. The grid ratio will also be present and will contain the data of total number of species, current number of species, increase in count of species, decrease in count of species.

Scenerios
Rainfall
Migration
Overgrazing
Human Intervnetion

Figure 10

The above four scenarios (Figure 10) have been created based on the area of the study due to time constraints. The suggested prototype can be expanded for further research and analysis to include more scenarios.

9. CONCLUSIONS

Artificial Neural Network using a gaming approach for an ecosystem is discussed in this study. The ANN model used here is Multilayer Perceptron (MLP). Simple approach of using spread sheets to analyze and output the data from the ANN model is highlighted. This paper also evaluates the need for using simple and handy tools that are readily available. Prototype of a sample set of Plant and Animal species in the Lower Himalayan system has been provided. ANN has been

created using single and multiple runs. In the current study it has been found that data ordering using a seven kingdom approach (ecological standard) yields better results. This paper highlights the integrated use of simulation techniques and gaming approach to generate a feasible predictive model. Generating case scenarios using the ANN data through a gaming engine enables the user to visualize and predict the environmental changes and the factors that influence the system as a whole.

10. FUTURE WORK

Our future work would evolve finer details on using this integrated approach for a larger data set and output with a mix of scenarios. The intent is to expand the current scope of study to other regions in the Himalayan System and use visual based techniques as well. We would like to pursue more work in terms of expanding additional features and work towards establishing accuracy of parameters for a neural network and gaming engine as our initial studies shows great promise.

11.0 REFERENCES

Nature Serve Technical Report July 2009

Encyclopedia of Earth- Biological diversity in the Himalayas

Himalayas- Environmental Problems-ThinkQuest

Introduction to Neural networks- Artificial Neural Network technologies Tutorial

Standards for Bio-Geo Database- Natural Resources Data Management System (NRDMS) Department of Science and Technology (DST) Ministry of Science and Technology Government of India

Proceedings of the International Mountain Biodiversity Conference Kathmandu, 16-18 November 2008 (ICMOD)