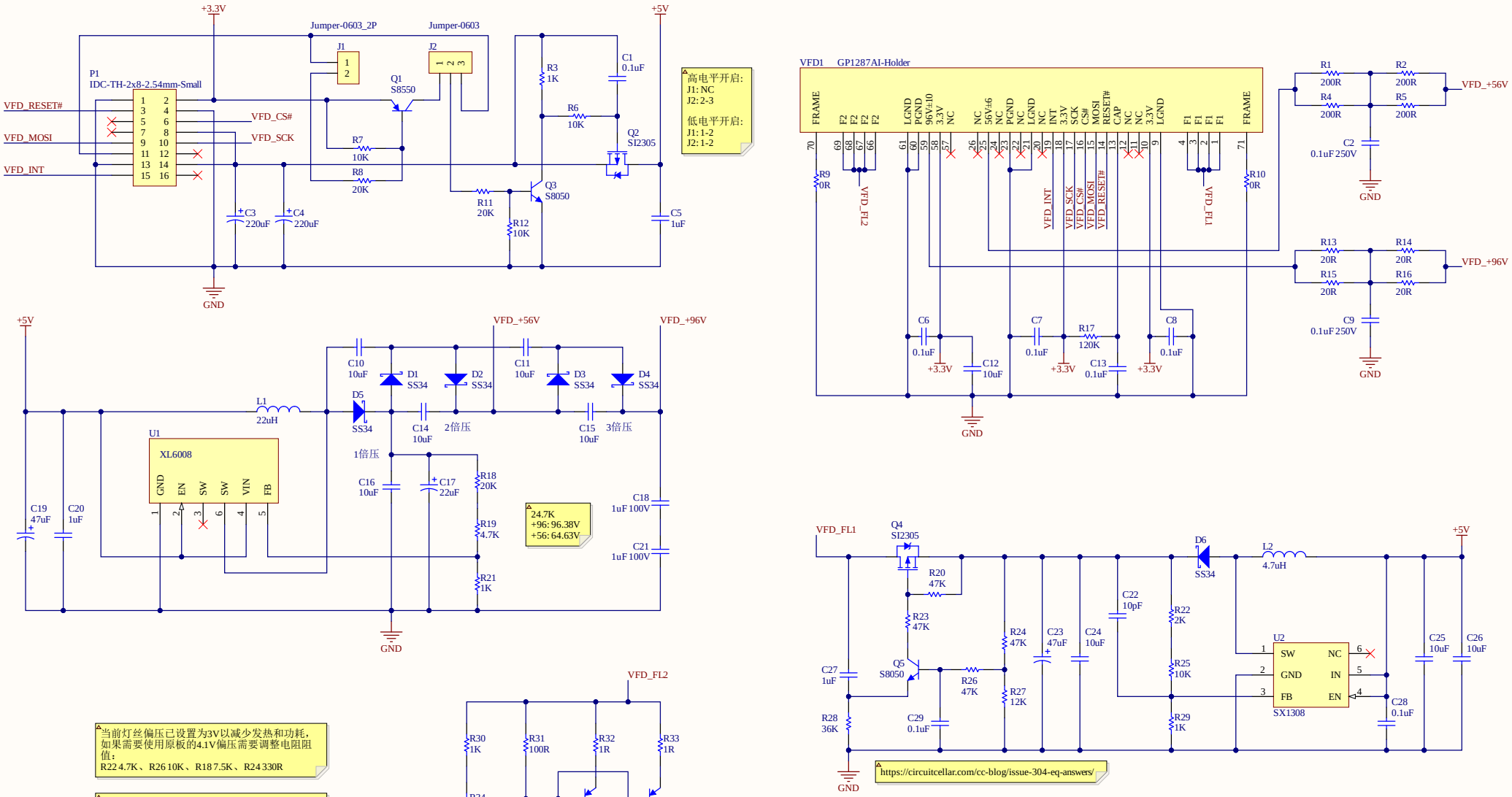

Title	GP1287AI VFD BOARD	
Size A3	Number 1	Revision 4.00
Date: 3/18/2022		Sheet of
File: E:\Projects\..\Sheet1.SchDoc		Drawn By: