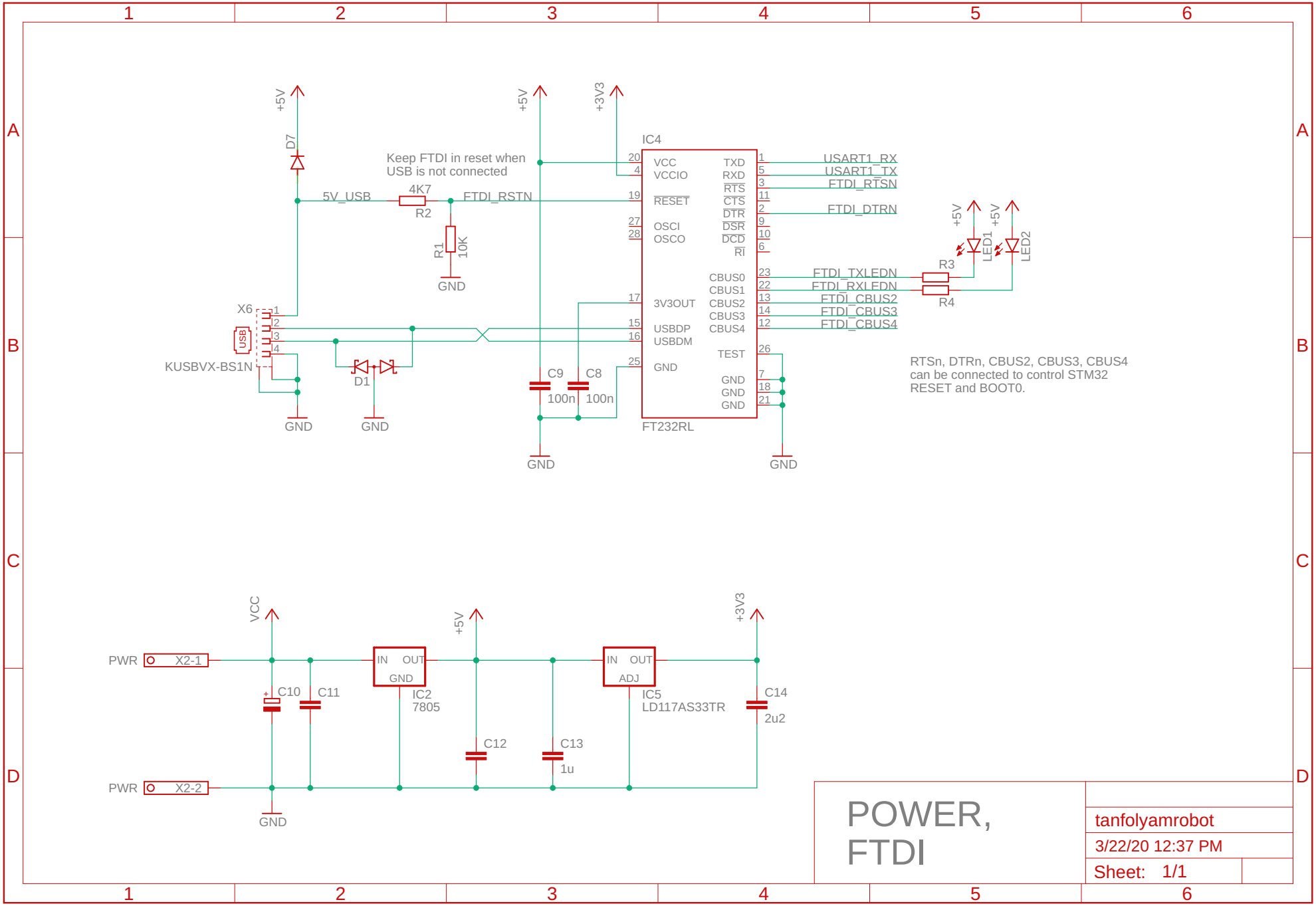
+5V
D7
5V_USB
4K7
R2
FTDI_RSTN
R1
10K
GND
Keep FTDI in reset when
USB is not connected
+5V
+3V3
IC4
VCC
VCCIO
RESET
OSCI
OSCO
3V3OUT
USBDP
USBDM
GND
TXD
RXD
RTS
CTS
DTR
DSR
DCD
RI
CBUS0
CBUS1
CBUS2
CBUS3
CBUS4
TEST
GND
GND
GND
FT232RL
USART1_RX
USART1_TX
FTDI_RTSN
FTDI_DTRN
FTDI_TXLEDN
FTDI_RXLEDN
FTDI_CBUS2
FTDI_CBUS3
FTDI_CBUS4
+5V
LED1
+5V
LED2
R3
R4
X6
USB
KUSBVX-BS1N
D1
GND
GND
C9
100n
C8
100n
GND
GND
RTSn, DTRn, CBUS2, CBUS3, CBUS4
can be connected to control STM32
RESET and BOOT0.
VCC
PWR
X2-1
C10
C11
IN
OUT
GND
IC2
7805
+5V
C12
C13
1u
IN
OUT
ADJ
IC5
LD117AS33TR
+3V3
C14
2u2
PWR
X2-2
GND
POWER,
FTDI
tanfolyamrobot
3/22/20 12:37 PM
Sheet: 1/1

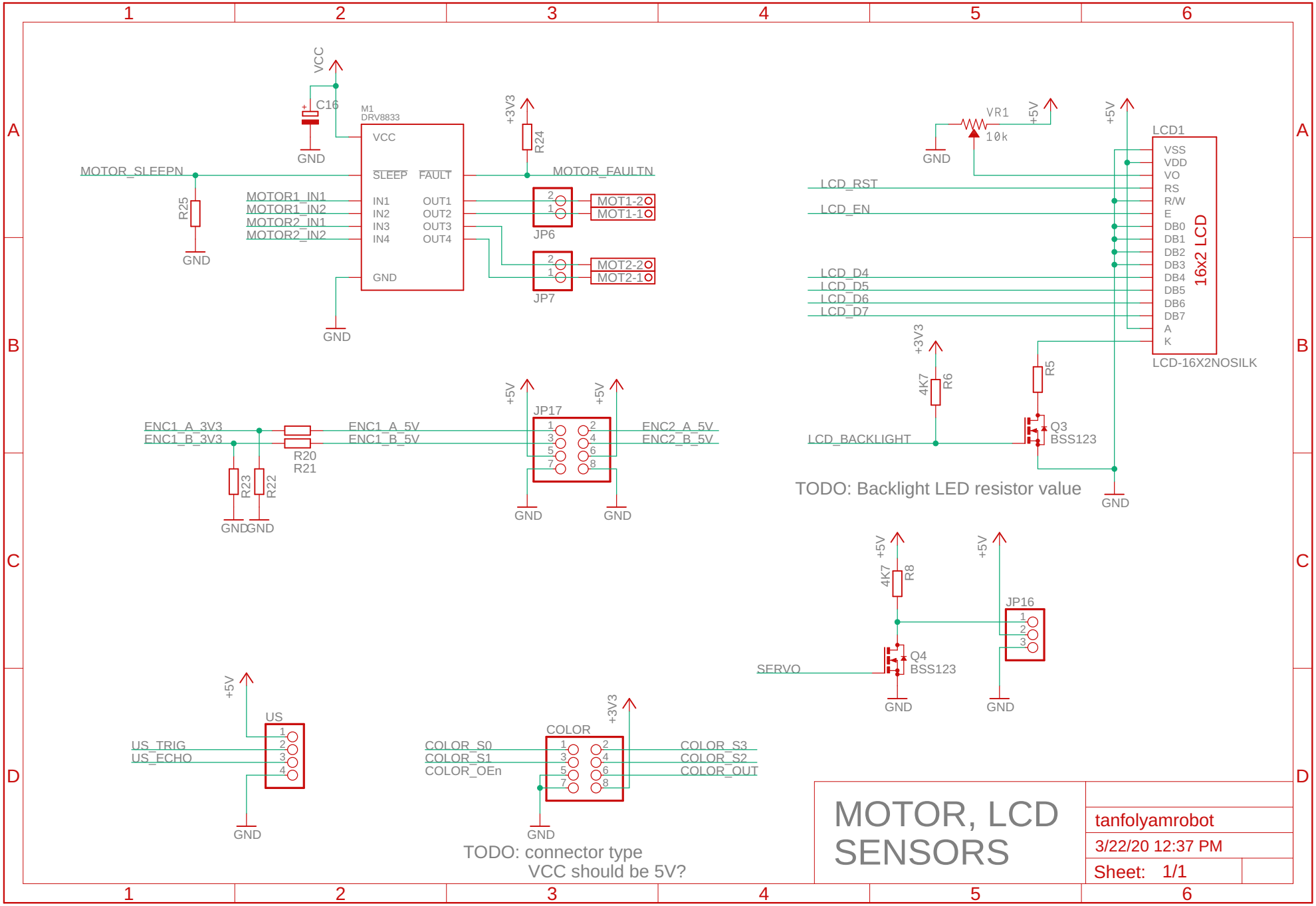
VCC
C16
GND
M1
DRV8833
VCC
SLEEP
FAULT
IN1
IN2
IN3
IN4
OUT1
OUT2
OUT3
OUT4
GND
MOTOR_SLEEPN
R25
MOTOR1_IN1
MOTOR1_IN2
MOTOR2_IN1
MOTOR2_IN2
+3V3
R24
MOTOR_FAULTN
JP6
MOT1-2
MOT1-1
JP7
MOT2-2
MOT2-1
VR1
10k
+5V
LCD1
VSS
VDD
VO
RS
R/W
E
DB0
DB1
DB2
DB3
DB4
DB5
DB6
DB7
A
K
16x2 LCD
LCD-16X2NOSILK
LCD_RST
LCD_EN
LCD_D4
LCD_D5
LCD_D6
LCD_D7
4K7
R6
R5
Q3
BSS123
LCD_BACKLIGHT
TODO: Backlight LED resistor value
ENC1_A_3V3
ENC1_B_3V3
R20
R21
R23
R22
ENC1_A_5V
ENC1_B_5V
JP17
ENC2_A_5V
ENC2_B_5V
R8
Q4
BSS123
SERVO
JP16
US
US_TRIG
US_ECHO
COLOR
COLOR_S0
COLOR_S1
COLOR_OEn
COLOR_S3
COLOR_S2
COLOR_OUT
TODO: connector type
VCC should be 5V?
MOTOR, LCD
SENSORS
tanfolyamrobot
3/22/20 12:37 PM
Sheet: 1/1

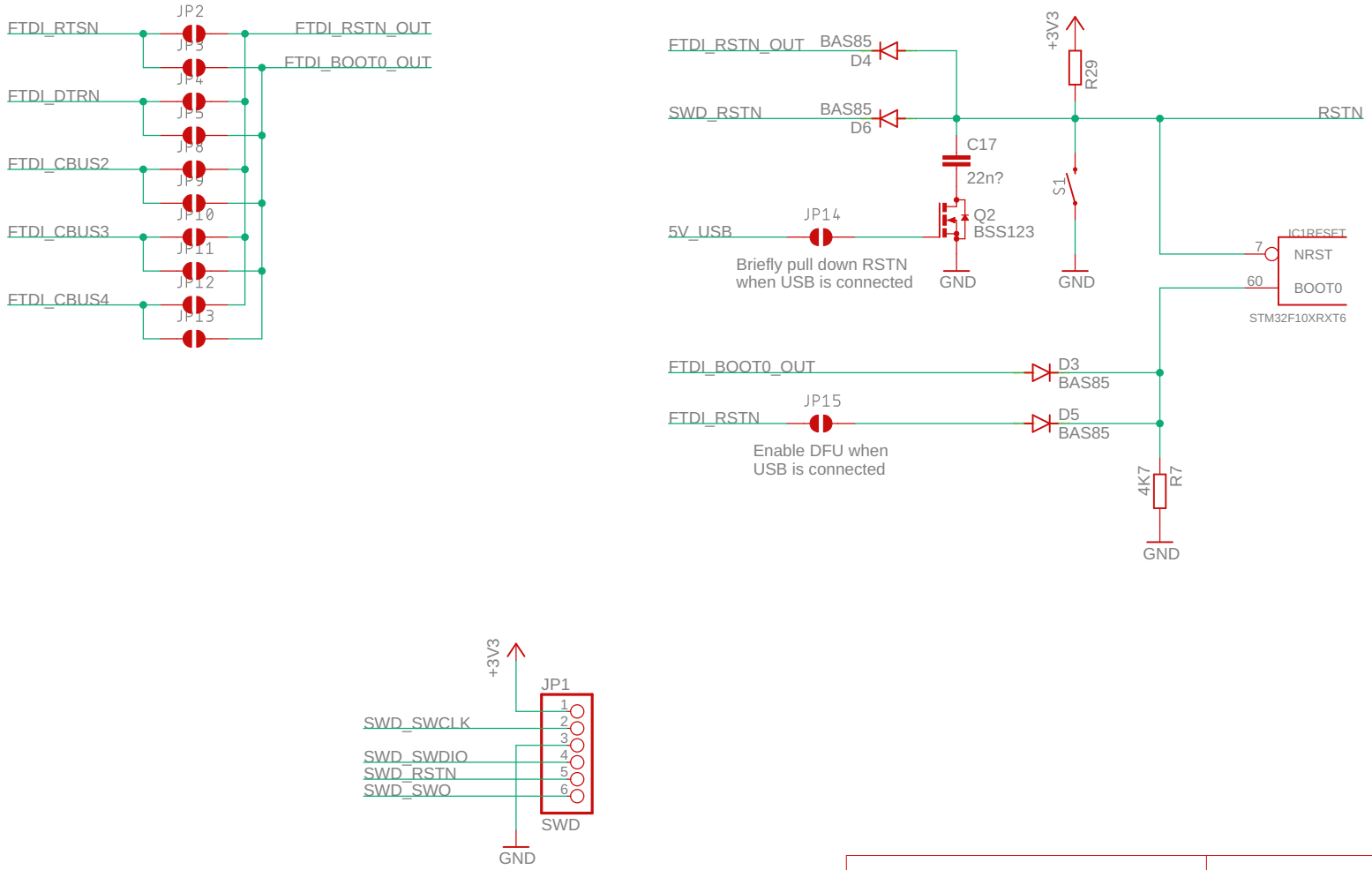

SWD, RESET, BOOT

tanfolyamrobot

3/22/20 12:37 PM

Sheet: 1/1

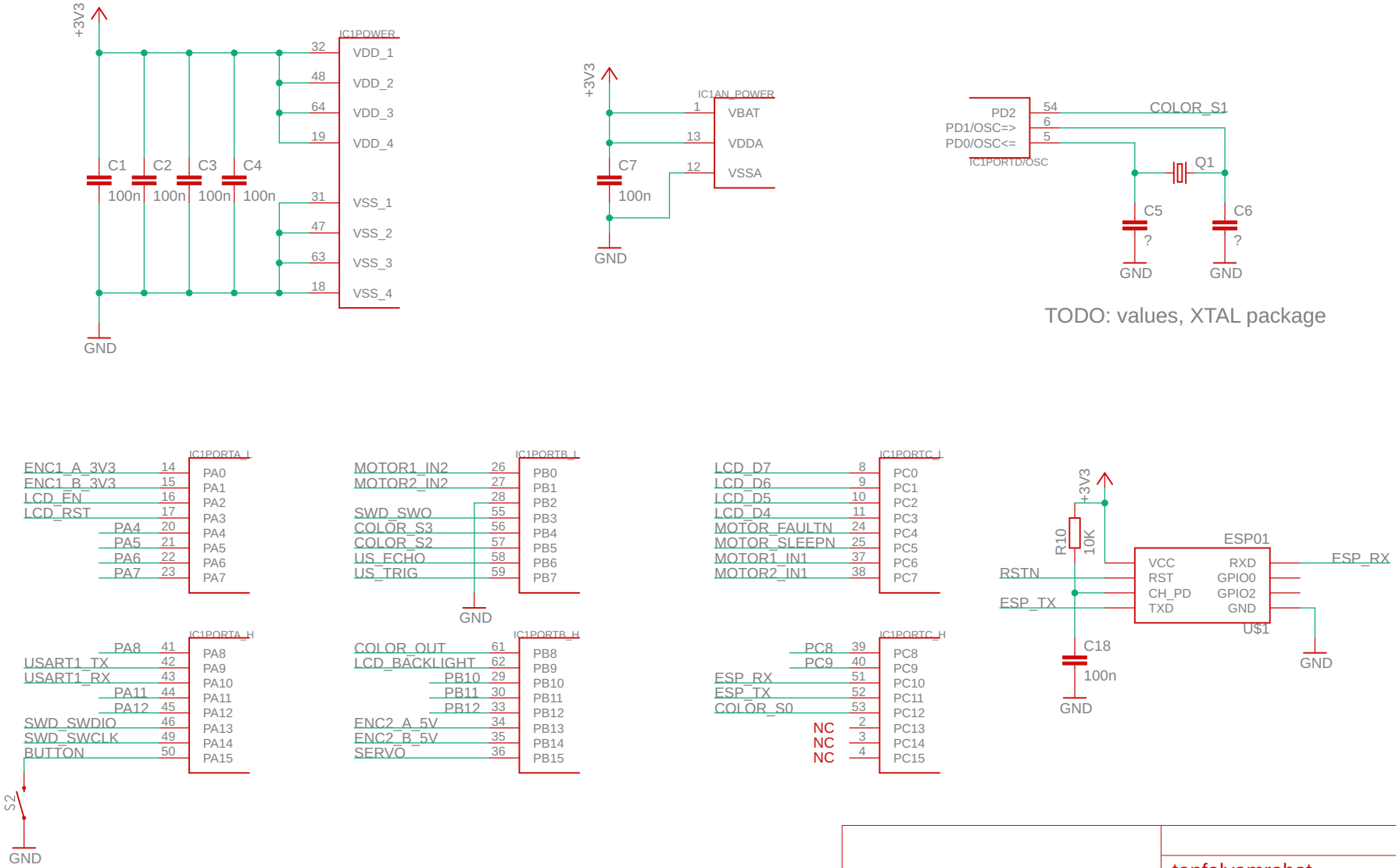

STM, ESP

tanfolyamrobot

3/22/20 12:37 PM

Sheet: 1/1