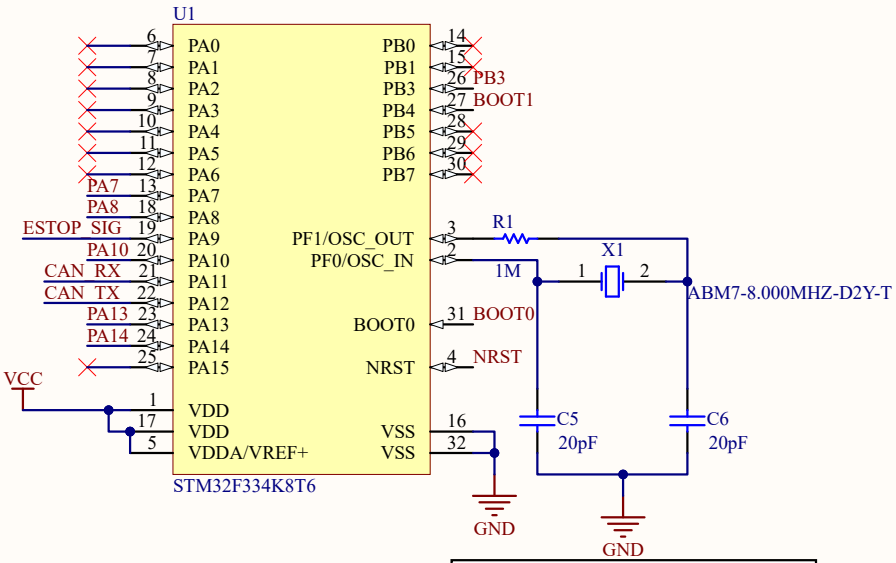

provides the clock speed for for the MC

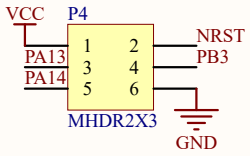

JTAG loader pins

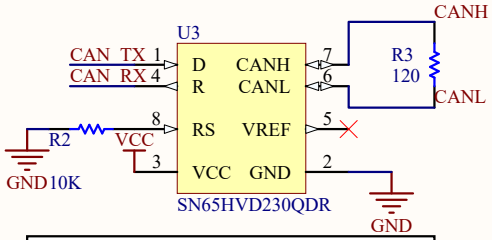

CAN trancevier for CAN BUS communication

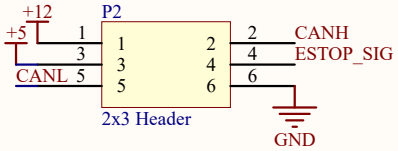

connector to provide 12 volt, 5 volts, CAN signals, and emergency stop signal

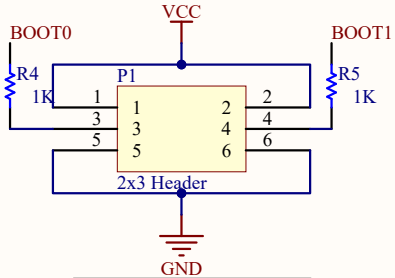

2x3 headers are used to access the boot modes of the MC

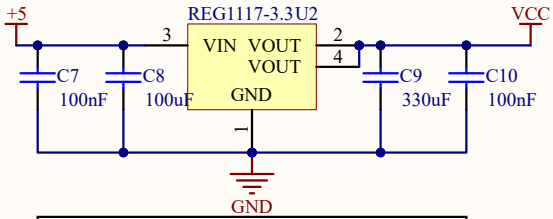

3.3 voltage regulator with decoupling capacitors

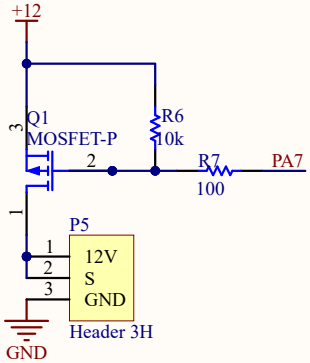

JST Connector will attach to a MOSFET to switch the Light on and off. The 2 12V will connect to a light that power either side.

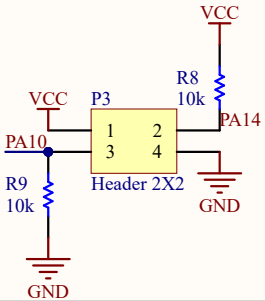

Connects the pins of the MC to high and low for CAN to operate

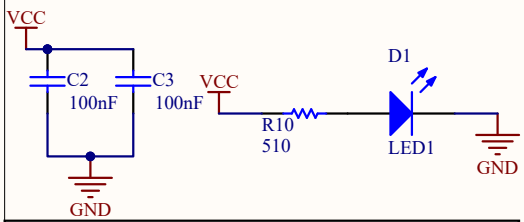

decoupling capacitors for the MC and an ON/OFF LED

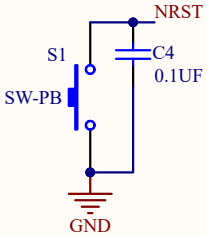

reset switch

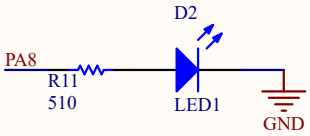

On board LED attached to I/O pin

Title: Safety Lights Schematic		
Size: A	Number	Revision: TWO (2)
Date: 10/19/2022		Sheet of
File: C:\Users\..\Safety_LightsSch.SchDoc		Drawn By: Jorge Exinia