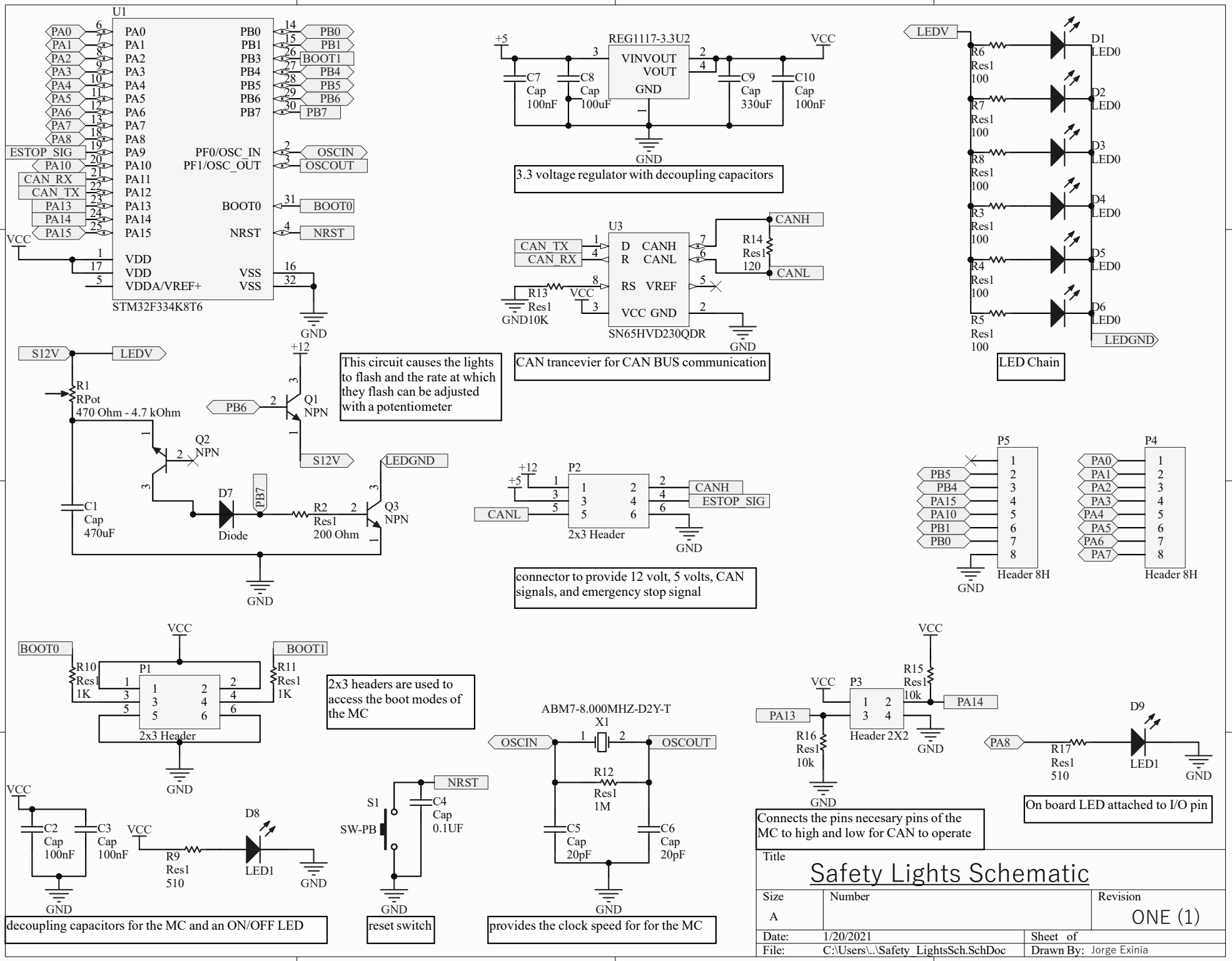
U1
STM32F334K8T6
PA0 PA1 PA2 PA3 PA4 PA5 PA6 PA7 PA8 PA9 PA10 PA11 PA12 PA13 PA14 PA15
PB0 PB1 PB3 PB4 PB5 PB6 PB7
PF0/OSC_IN
PF1/OSC_OUT
BOOT0
NRST
VDD VDD VDDA/VREF+
VSS VSS
ESTOP_SIG
CAN_RX
CAN_TX
BOOT1
OSCIN
OSCOUT
VCC
GND
REG1117-3.3U2
VINVOUT
VOUT
GND
C7 Cap 100nF
C8 Cap 100uF
C9 Cap 330uF
C10 Cap 100nF
3.3 voltage regulator with decoupling capacitors
U3
SN65HVD230QDR
D CANH
R CANL
RS VREF
VCC GND
R13 Res1 10K
R14 Res1 120
CANH
CANL
CAN trancevier for CAN BUS communication
LEDV
LEDGND
R6 R7 R8 R3 R4 R5 Res1 100
D1 D2 D3 D4 D5 D6 LED0
LED Chain
S12V
R1 RPot 470 Ohm - 4.7 kOhm
Q1 NPN
Q2 NPN
Q3 NPN
+12
PB6
PB7
D7 Diode
R2 Res1 200 Ohm
C1 Cap 470uF
This circuit causes the lights to flash and the rate at which they flash can be adjusted with a potentiometer
P2
2x3 Header
+5
CANH
ESTOP_SIG
connector to provide 12 volt, 5 volts, CAN signals, and emergency stop signal
P5
Header 8H
PB5 PB4 PA15 PA10 PB1 PB0
P4
Header 8H
PA0 PA1 PA2 PA3 PA4 PA5 PA6 PA7
BOOT0
BOOT1
R10 Res1 1K
R11 Res1 1K
P1
2x3 Header
2x3 headers are used to access the boot modes of the MC
C2 Cap 100nF
C3 Cap 100nF
R9 Res1 510
D8
LED1
decoupling capacitors for the MC and an ON/OFF LED
S1
SW-PB
C4 Cap 0.1UF
NRST
reset switch
ABM7-8.000MHZ-D2Y-T
X1
R12 Res1 1M
C5 Cap 20pF
C6 Cap 20pF
provides the clock speed for for the MC
P3
Header 2X2
R15 Res1 10k
R16 Res1 10k
PA13
PA14
Connects the pins necesary pins of the MC to high and low for CAN to operate
PA8
R17 Res1 510
D9
LED1
On board LED attached to I/O pin
Title
Safety Lights Schematic
Size A
Number
Revision ONE (1)
Date: 1/20/2021
Sheet of
File: C:\Users\..\Safety_LightsSch.SchDoc
Drawn By: Jorge Exinia