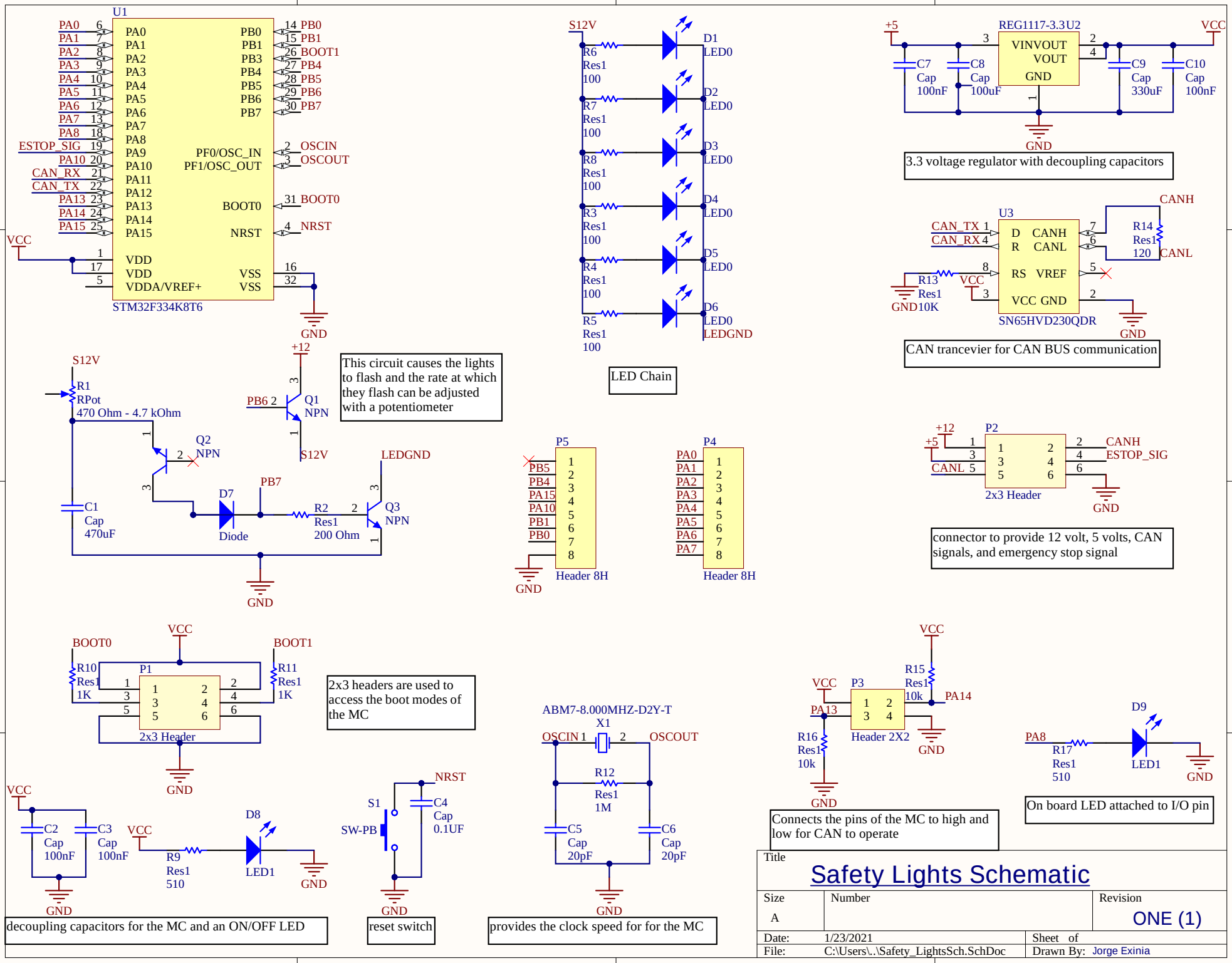
U1
STM32F334K8T6
PA0 PA1 PA2 PA3 PA4 PA5 PA6 PA7 PA8 PA9 PA10 PA11 PA12 PA13 PA14 PA15
PB0 PB1 PB3 PB4 PB5 PB6 PB7
PF0/OSC_IN PF1/OSC_OUT BOOT0 NRST
VDD VDD VDDA/VREF+ VSS VSS
ESTOP_SIG CAN_RX CAN_TX
BOOT1 OSCIN OSCOUT
VCC GND
S12V R1 RPot 470 Ohm - 4.7 kOhm
Q1 NPN Q2 NPN Q3 NPN
+12 PB6 PB7 LEDGND
C1 Cap 470uF
D7 Diode
R2 Res1 200 Ohm
This circuit causes the lights to flash and the rate at which they flash can be adjusted with a potentiometer
R6 R7 R8 R3 R4 R5 Res1 100
D1 D2 D3 D4 D5 D6 LED0
LEDGND
LED Chain
REG1117-3.3 U2
VINVOUT VOUT GND
C7 Cap 100nF
C8 Cap 100uF
C9 Cap 330uF
C10 Cap 100nF
3.3 voltage regulator with decoupling capacitors
U3
SN65HVD230QDR
D CANH R CANL RS VREF VCC GND
CAN_TX CAN_RX
R13 Res1 10K
R14 Res1 120
CANH CANL
CAN trancevier for CAN BUS communication
P5 Header 8H
P4 Header 8H
PB5 PB4 PA15 PA10 PB1 PB0
PA0 PA1 PA2 PA3 PA4 PA5 PA6 PA7
P2 2x3 Header
+12 +5 CANL
CANH ESTOP_SIG
connector to provide 12 volt, 5 volts, CAN signals, and emergency stop signal
BOOT0 BOOT1
R10 Res1 1K
R11 Res1 1K
P1 2x3 Header
2x3 headers are used to access the boot modes of the MC
C2 Cap 100nF
C3 Cap 100nF
R9 Res1 510
D8 LED1
decoupling capacitors for the MC and an ON/OFF LED
S1 SW-PB
C4 Cap 0.1UF
NRST
reset switch
ABM7-8.000MHZ-D2Y-T X1
OSCIN OSCOUT
R12 Res1 1M
C5 Cap 20pF
C6 Cap 20pF
provides the clock speed for for the MC
P3 Header 2X2
PA13 PA14
R15 Res1 10k
R16 Res1 10k
Connects the pins of the MC to high and low for CAN to operate
PA8
R17 Res1 510
D9 LED1
On board LED attached to I/O pin
Title
Safety Lights Schematic
Size A
Number
Revision ONE (1)
Date: 1/23/2021
Sheet of
File: C:\Users\..\Safety_LightsSch.SchDoc
Drawn By: Jorge Exinia

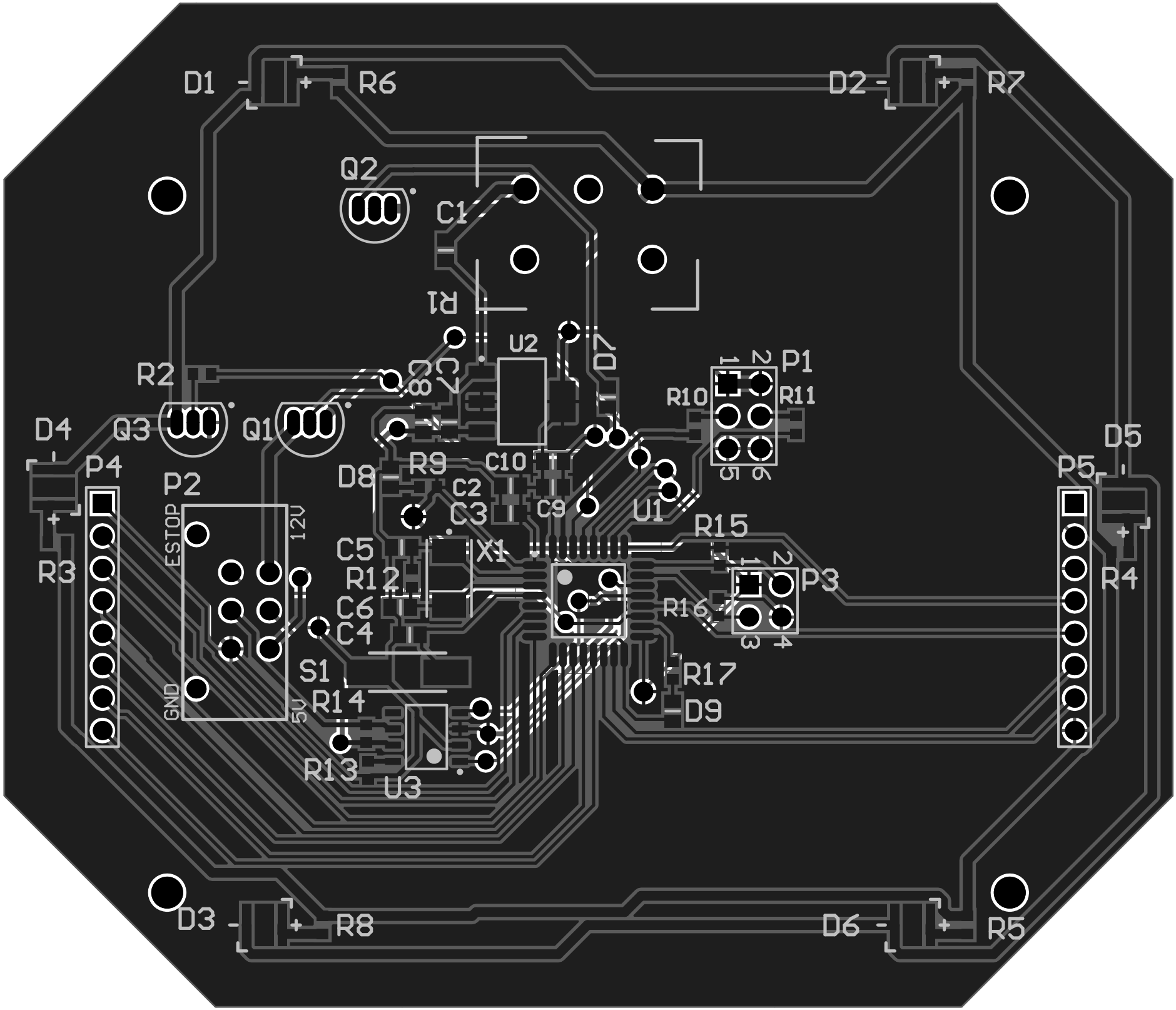
D1
R6
D2
R7
Q2
C1
R1
U2
D7
C8
R2
Q3
Q1
D4
P4
P2
ESTOP
12V
GND
5V
R3
D8
R9
C10
C2
C3
C9
U1
C5
X1
R12
C6
C4
S1
R14
R13
U3
R10
P1
R11
R15
P3
R16
R17
D9
D5
P5
R4
D3
R8
D6
R5