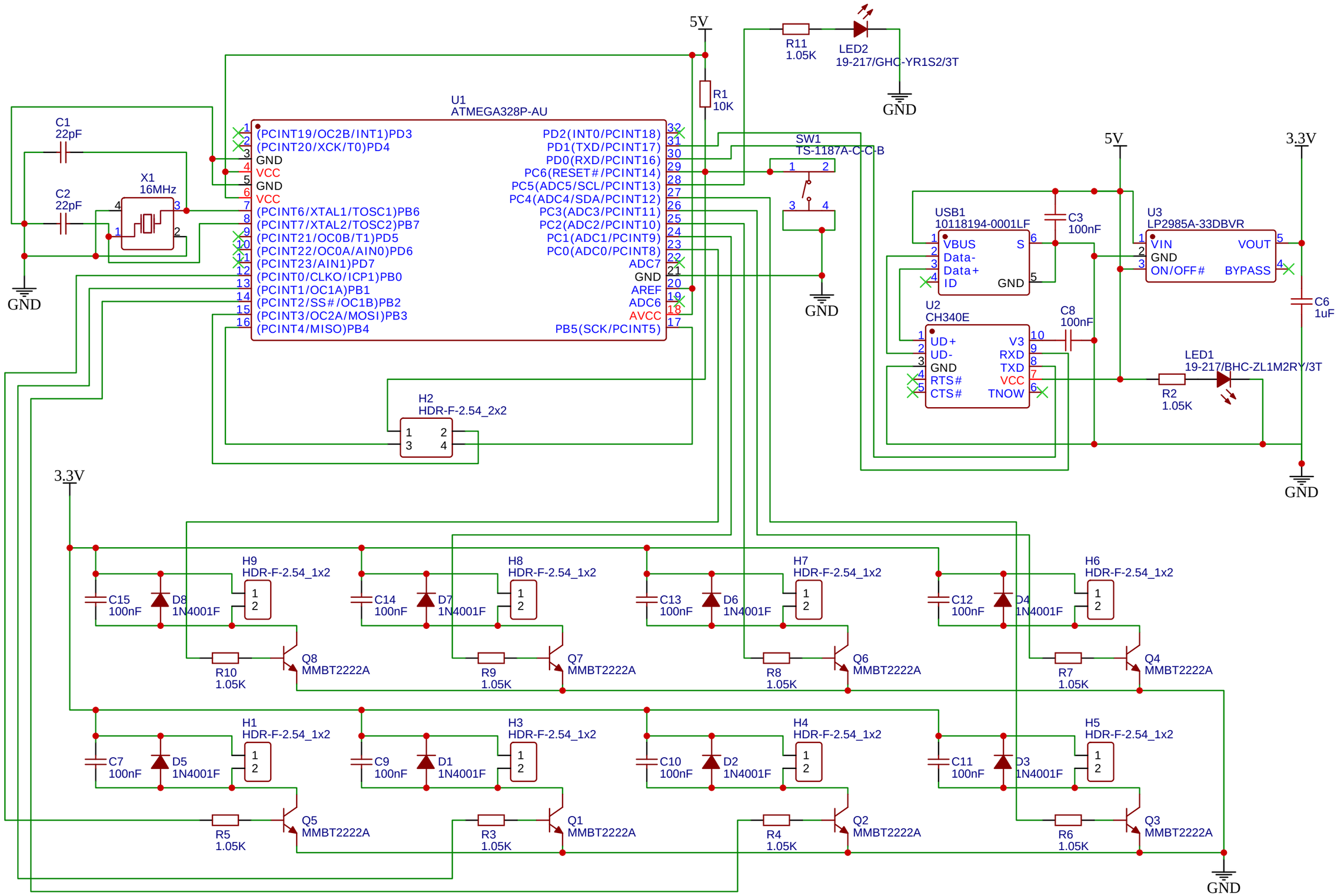

TITLE: Bandit	REV: 1.1
Company:	Sheet: 1/1
Date: 2020-07-18 Drawn By:	