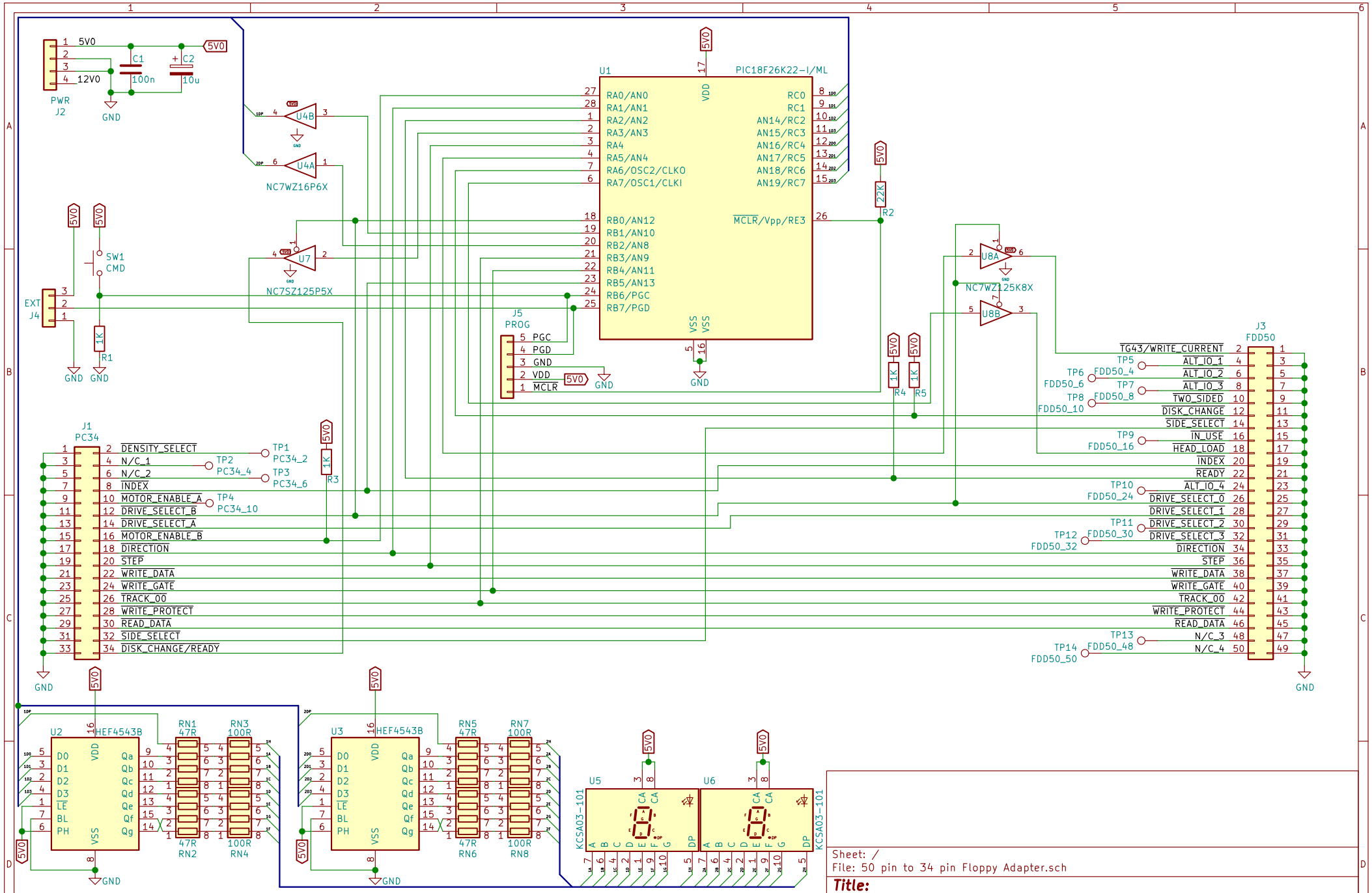

Sheet: /
File: 50 pin to 34 pin Floppy Adapter.sch

Title:

Size: A4	Date:	Rev:
KiCad E.D.A. kicad (5.99.0-576-ga860ac506)		Id: 1/1