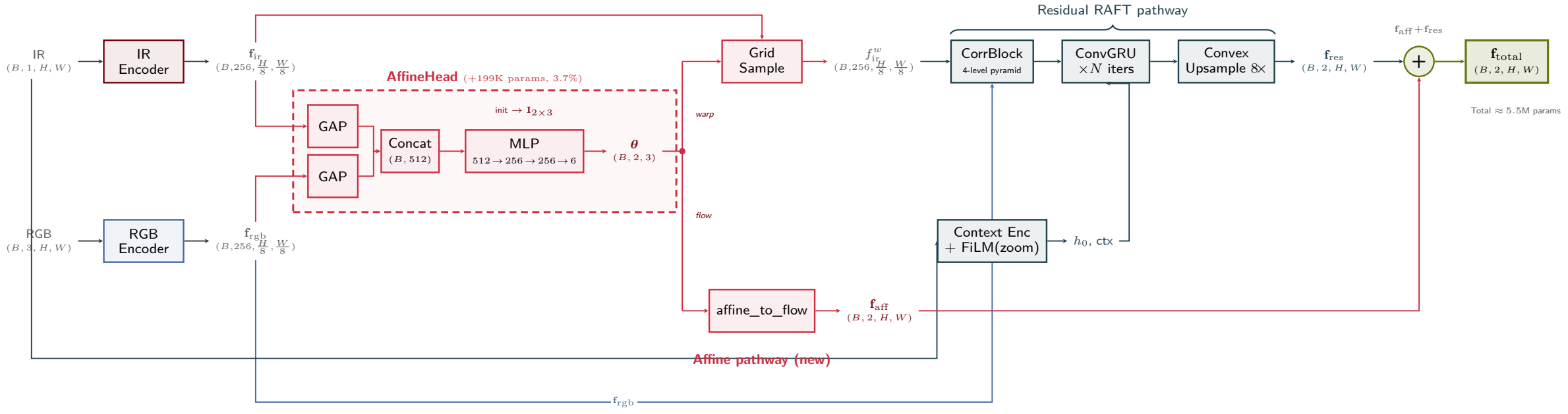
Residual RAFT pathway
IR
$(B, 1, H, W)$
IR Encoder
$\mathbf{f}_{\mathrm{ir}}$
$(B, 256, \frac{H}{8}, \frac{W}{8})$
AffineHead (+199K params, 3.7%)
GAP
GAP
Concat
$(B, 512)$
init $\rightarrow \mathbf{I}_{2\times 3}$
MLP
$512 \rightarrow 256 \rightarrow 256 \rightarrow 6$
$\boldsymbol{\theta}$
$(B, 2, 3)$
RGB
$(B, 3, H, W)$
RGB Encoder
$\mathbf{f}_{\mathrm{rgb}}$
$(B, 256, \frac{H}{8}, \frac{W}{8})$
warp
flow
Grid Sample
f^{w}_{ir}
$(B, 256, \frac{H}{8}, \frac{W}{8})$
CorrBlock
4-level pyramid
ConvGRU
$\times N$ iters
Convex Upsample 8×
$\mathbf{f}_{\mathrm{res}}$
$(B, 2, H, W)$
$\mathbf{f}_{\mathrm{aff}} + \mathbf{f}_{\mathrm{res}}$
$\mathbf{f}_{\mathrm{total}}$
$(B, 2, H, W)$
Total ≈ 5.5M params
Context Enc
+ FiLM(zoom)
h_0, ctx
affine_to_flow
$\mathbf{f}_{\mathrm{aff}}$
$(B, 2, H, W)$
Affine pathway (new)
$\mathbf{f}_{\mathrm{rgb}}$