JAKCOM R5 Smart Ring
Instruction for Use

Click the above image to watch the instructions video

Buy now

Product introduction：

JAKCOM R5 is a multifunctional smart ring that can replace 6 proximity cards simultaneously,
Interact with mobile phones to realize special functions of "Social Sharing", "Wireless USB Flash Disk", "Smart Home Trigger" and so on.
Built-in 2 health energy stones to improve human EMFs, and has scratch-resistant, waterproof, dustproof hardware characteristics.

Packing List:

Packing Box x1
Instruction Manual x2
JAKCOM R5 Smart Ring x1

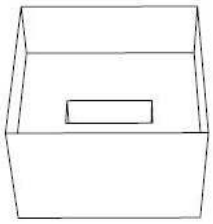
Packing box x 1

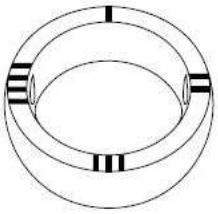
R4 Smart Ring x 1

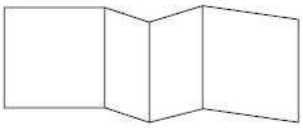
Instruction book x 2

Specification Parameters:

Carrier Frequency: 13.56MHZ, 125KHZ
RF Distance: 1~3cm
IC Module Chip: CUID x2
Carrier Frequency of IC Module: 13.56MHZ
IC Module Feature: Equivalent to two M1 (Mifare1) IC cards, with card number and encrypted sector repeatedly modifiable.
ID Module Chip: T5577 x2
Carrier Frequency of ID Module: 125KHZ
ID Module Feature: Equivalent to two EM/HID ID cards with card number repeatedly modifiable.
NFC Module Chip: Ntag216 x2
Carrier Frequency of NFC Module: 13.56MHZ
NFC module features: Equivalent to two NFC smart cards which can interact with smart phones
NFC Phones applicable: All Android phones with NFC function, as well as iPhone launched after September 2018, such as iPhone XR, XS, 11, 12, 13, 14 and 15, etc.
Ring Material: Ceramics
Ring Weight: 9 Grams
Protection Grade: IP56
Tips: Ceramics has good scratch-resistance, but it cannot bear violent collision or drop. Please be careful in use

Structure and Sensing Range:

A. The area engraved with "I" is No.1 IC card

B. The area engraved with "II" is No.1 NFC card
C. The area engraved with "III" is No.2 IC card
D. The area engraved with "IIII" is No.2 NFC card

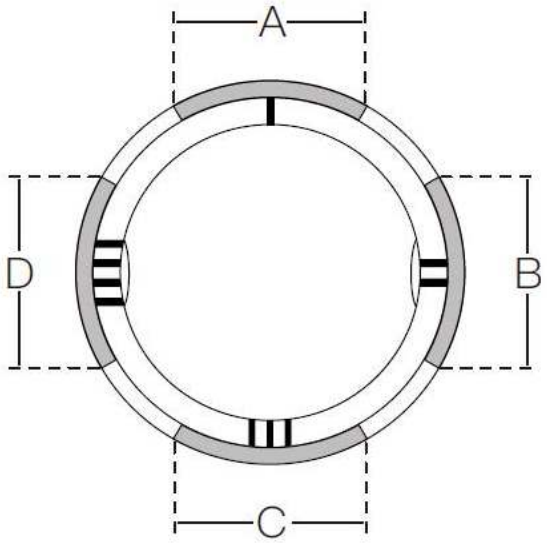

E. The white side area is No.1 ID card
F. The black side area is No.2 ID card
G. Health energy stone 1
H. Health energy stone 2

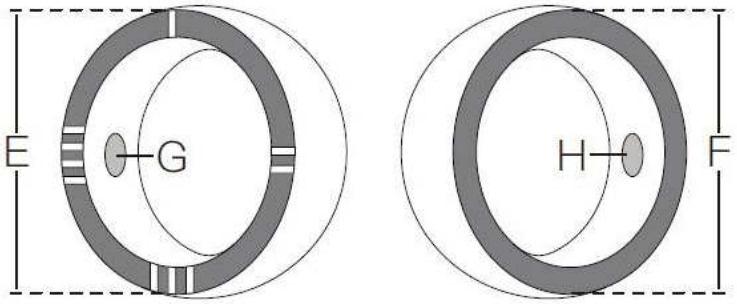

Reading method of IC and ID module:

The reading method of any IC or ID module is the same as an ordinary card, Close to the card reader according to the sensing range shown in the figure above.
Sketch Map:
Use No. 1 IC card

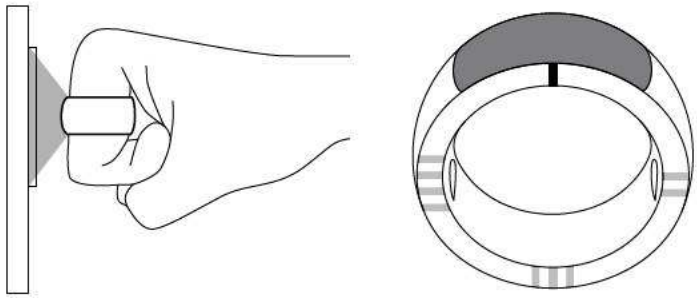

Use No. 2 IC card

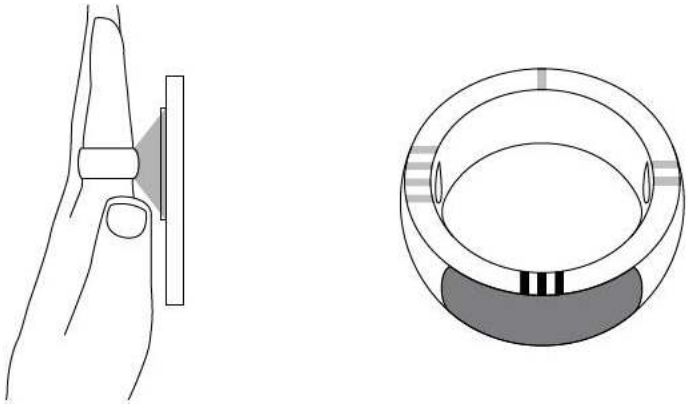

Use No. 1 ID card

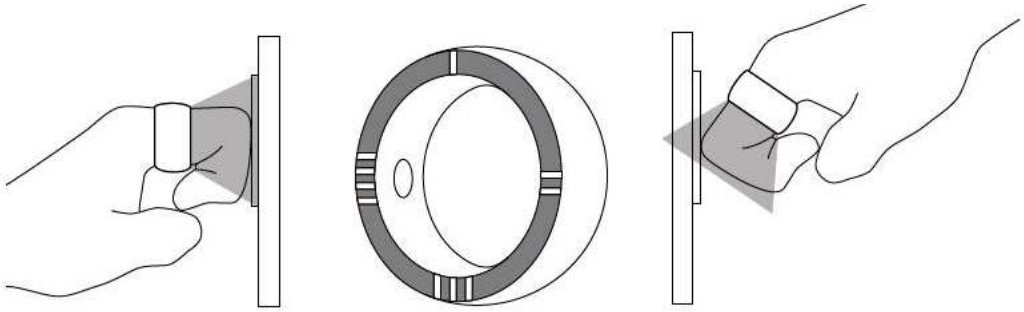

Use No. 2 ID card

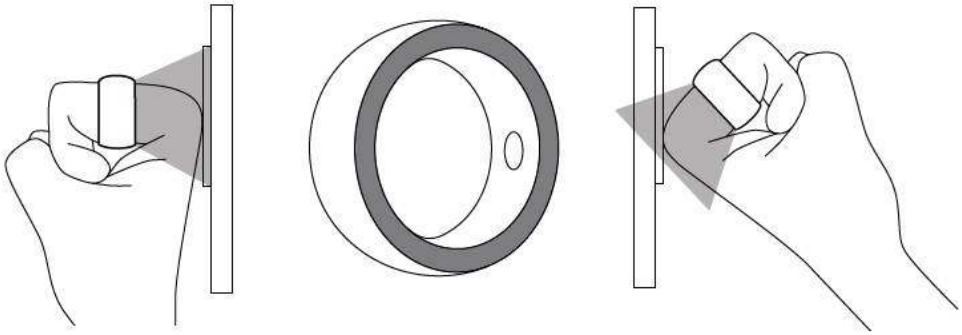

Tip: The antenna of each module shall be close to the card reader, The closer the distance, the more sensitive the reader will be.

Setting method of IC and ID module：

Any IC or ID module can be regarded as a new blank card, and the setting method is the same as an ordinary card;
At the original card issuer, add the IC or ID module as a new authorized card;
If you want to replicate the original card directly into the ring, please use the "JAKCOM CDS Replicator";
Scan the following QR code to view "JAKCOM CDS Replicator".
The default passwords of ID modules are :
ID1 = 5469616E
ID2 = 51243648
If your replicator supports the setting of encryption ID card editing, please enter the above password to edit.

Click to view the JAKCOM CDS Replicator

Settings of NFC module function：

1. Open the Facebook APP;
2. Search "**JAKCOM.com**" and follow this Page;

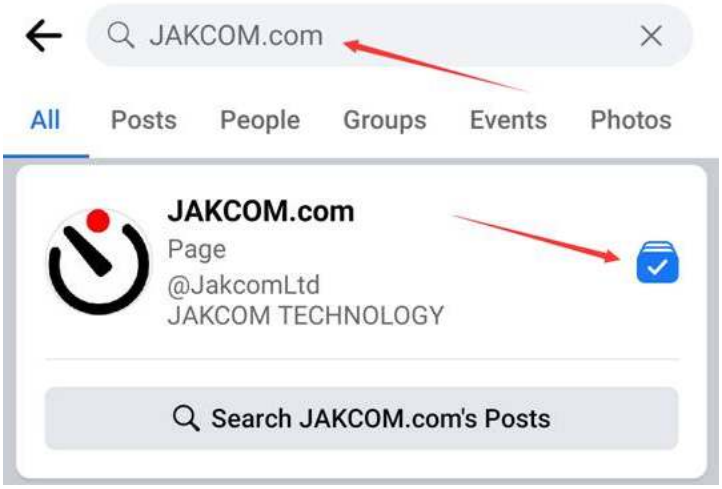

3. Enter the **JAKCOM.com** Page;
4. Click the "**Sign Up**" button;

https://nfc.jakcom.com
If you can't use Facebook
You can also scan
the QR code above
to set it up.

https://nfc.JAKCOM.com

5. Click the "**Add Device**" button;

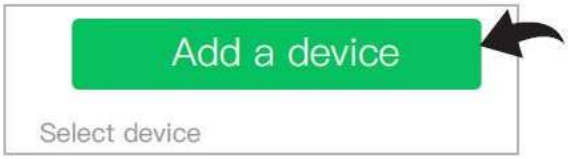

6. Input the activation code of back of the box;

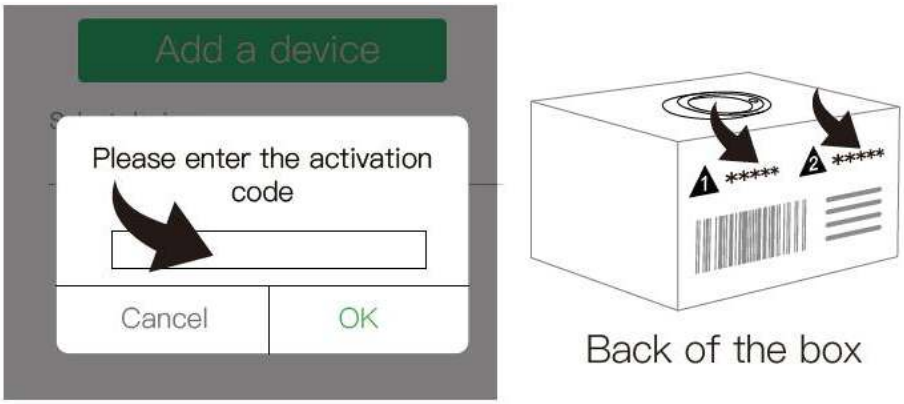

The activation code of No.1 NFC module: 1 *****

The activation code of No.2 NFC module: 2 *****

7. Click your device name in the list to enter function setting;

Different function services can be respectively set for these two NFC modules;

After a new function is set for corresponding module, the old functions will be automatically closed.

NFC function description

Social Sharing: Quickly share your social account information to other phones;

Personal Functions: Quickly start each personal functions by Ring’s NFC module;

Wireless Disk: Quickly share your files to other phones.

Startup of NFC module function:

1. Before use, please enable the NFC function of the phone. If the phone is not equipped with the NFC function, it cannot be used;

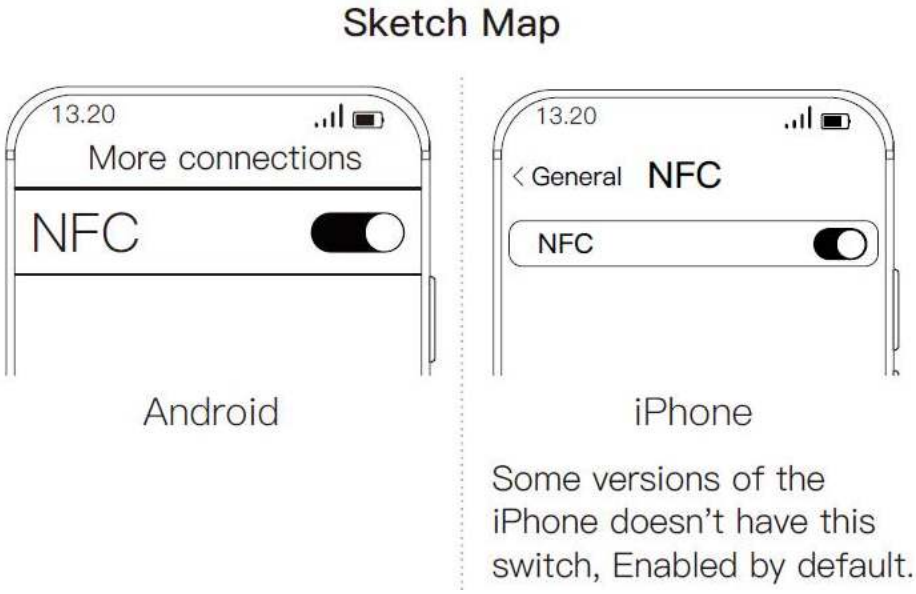

2. Use the well-set NFC module to touch the NFC sensing area of the phone, based on the sensing position shown below.

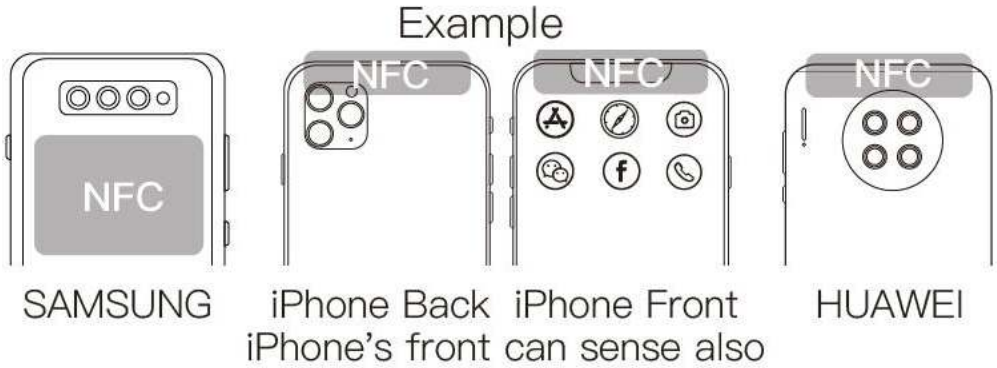

a) The NFC sensing area is different for different brands of mobile phone. Please refer to the original instructions manual of the phone;
b) Generally, the NFC function of the phone can only be enabled after the screen is unlocked;
c) Some phone shells may affect NFC signal. If the phone cannot sense it, please remove the phone shell and try again.

Sketch Map

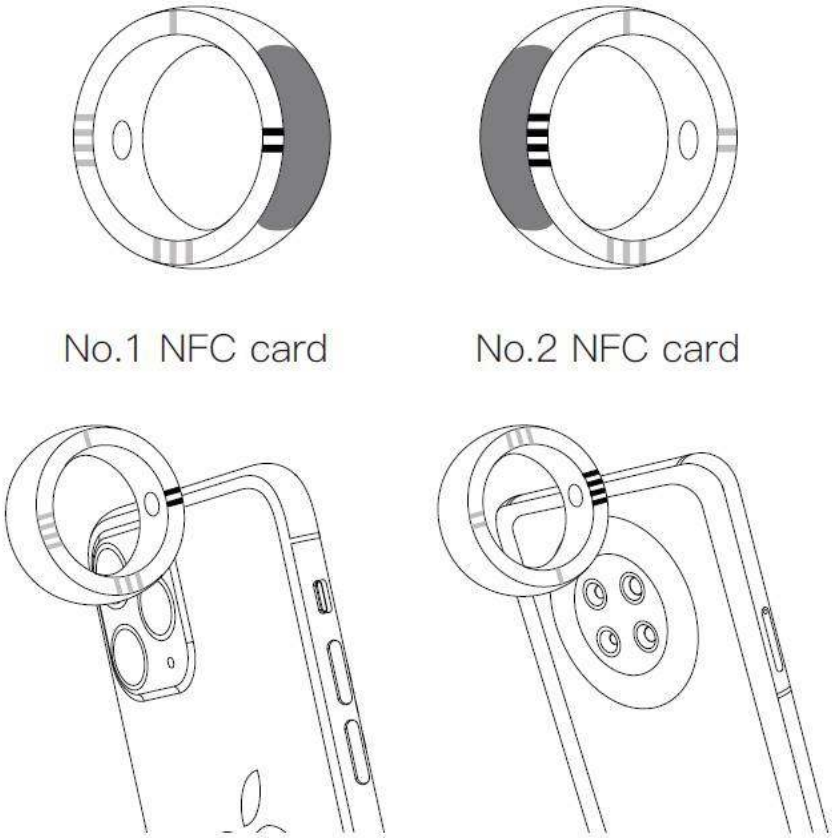

3. After successful sensing, if it is prompted to select the app to open, please

select the "web browser".

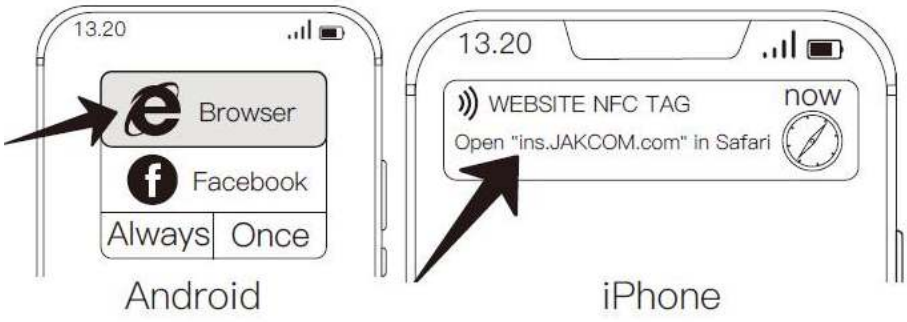

Third-party NFC application:

Any NFC module of the ring can be regarded as a standard NFC tag, and used in any third-party NFC application, such as "Pon Pon Tile of MIJIA", " Apple Shortcuts ", "Huawei Share ", "Nintendo Amiibo", etc..

Reset NFC default data:

If the third-party app rewrites the default data of the ring’ s NFC module, the default functions of the ring will be lost,
The default data can be reset in the following method;
1. Use an iPhone search and install "NFC-RESET" from the App Store, or use an Android phone which has NFC function to download and install "NFC RESET" through the following link;
http://www.jakcom.com/app/nfc/nfc_reset.apk

NFC RESET

2. Open it and enter your e-mail address;

3. Move the NFC module of the ring which is to be reset, close to the NFC sensing area of the phone, and the reset can be finished within a few seconds.

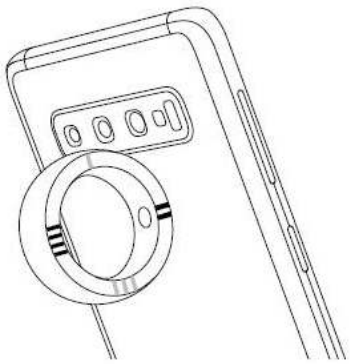

Contact details

a) Website: http://www.JAKCOM.com
b) Email: service@JAKCOM.com
c) Service Phone: +86 400 806 7311, +86 0351-4383818
d) Service time: 9 am – 9 pm GMT+8
e) Online Service: https://www.facebook.com/JakcomLtd
f) Online Store: https://shop.JAKCOM.com

View Online Store
https://shop.JAKCOM.com

JAKCOM
OS2
JAKCOM