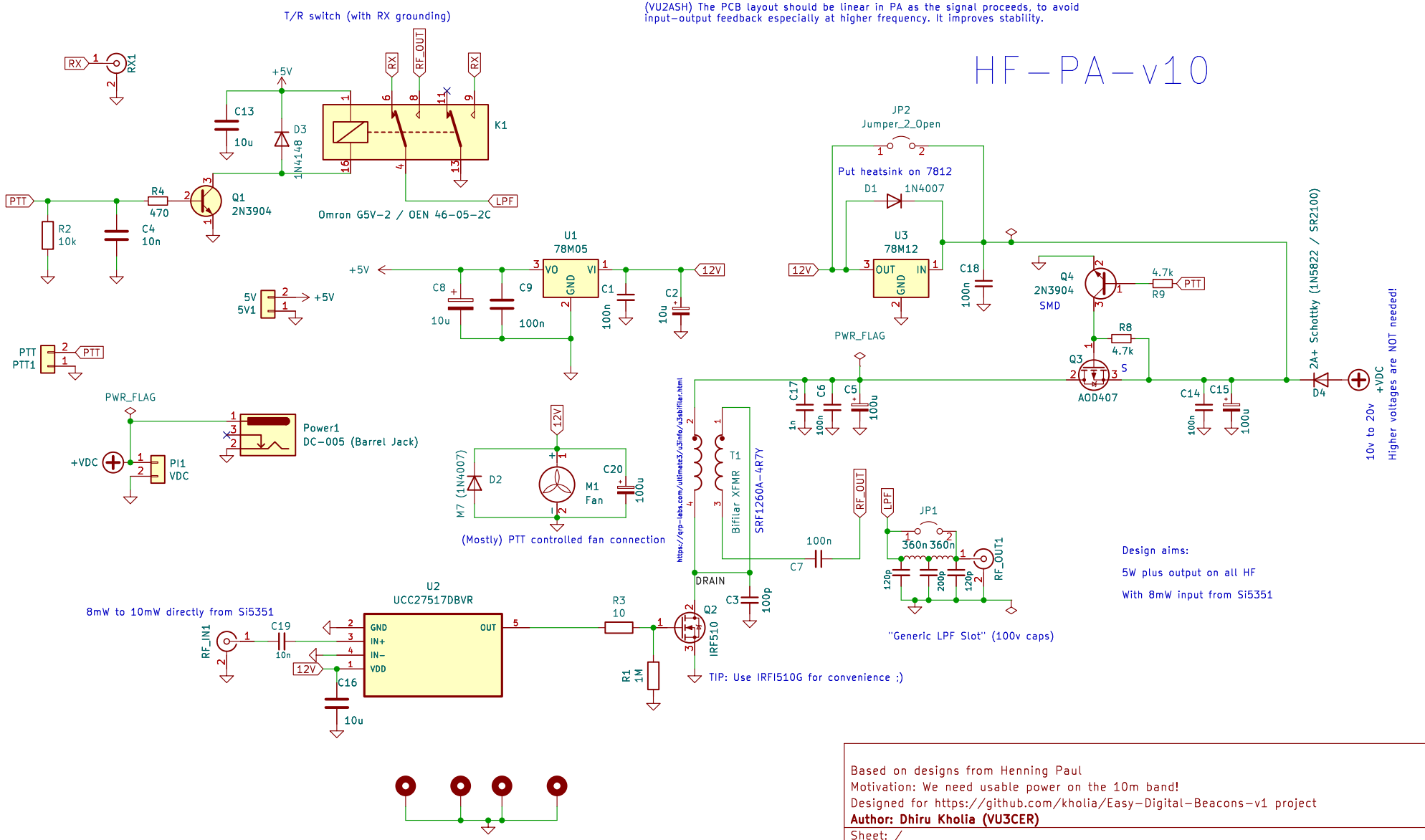

Based on designs from Henning Paul
Motivation: We need usable power on the 10m band!
Designed for https://github.com/kholia/Easy-Digital-Beacons-v1 project
Author: Dhiru Kholia (VU3CER)

Sheet: /
File: HF-PA-v10.kicad_sch

Title: Easy-PA-With-TR-Switch

Size: User	Date: 2023-08-27	**Rev: v1.11**
KiCad E.D.A. kicad 7.0.7-7.0.7~ubuntu22.04.1		Id: 1/1