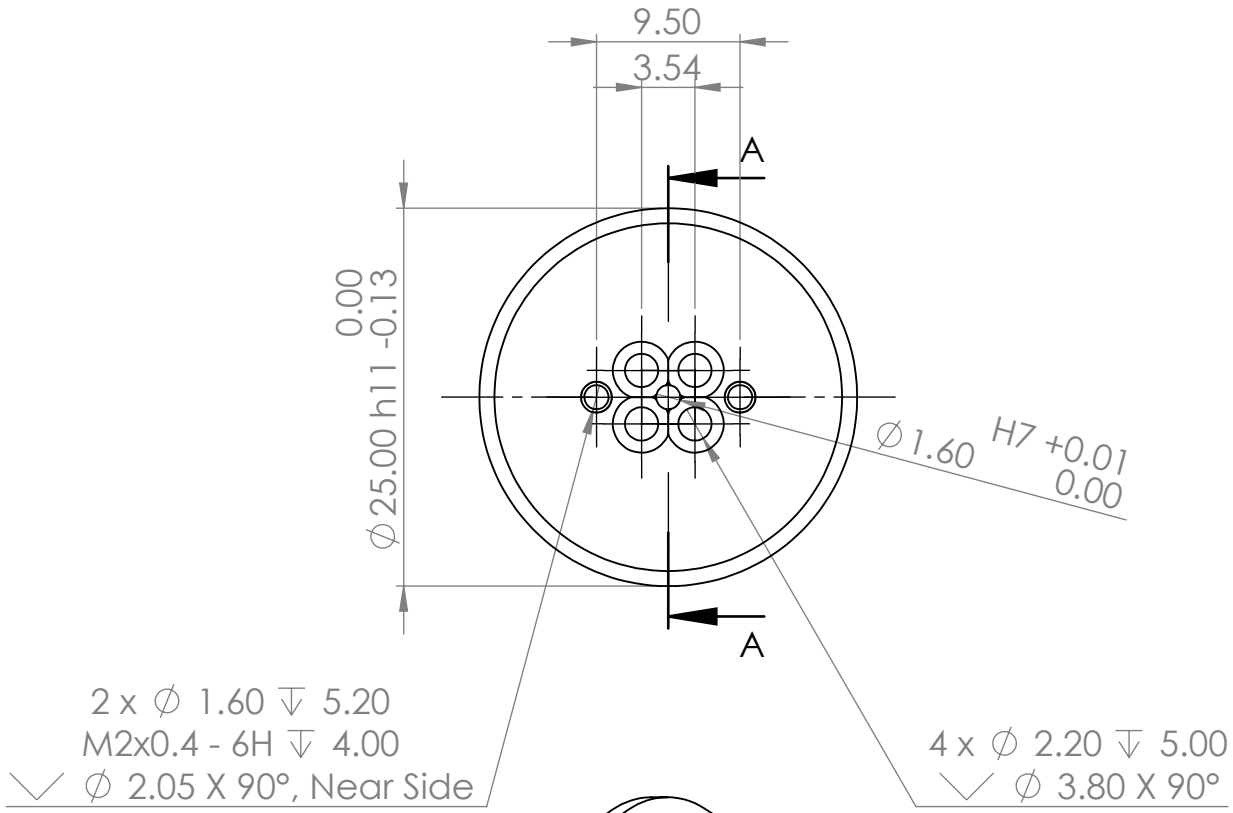

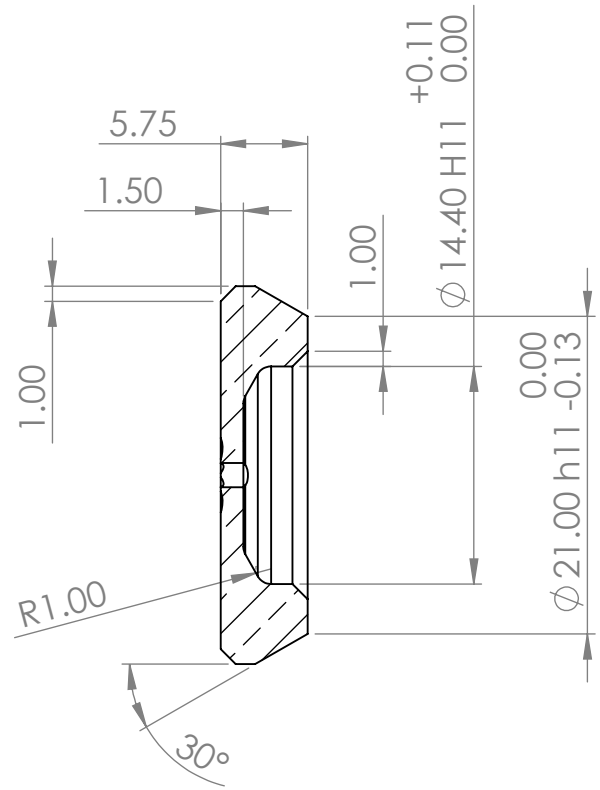

SECTION A-A

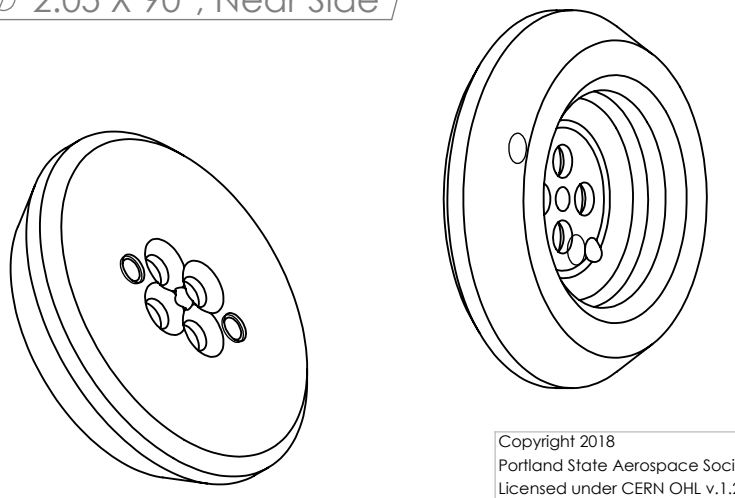

	NAME	DATE
DRAWN	Joe S.	9/16/2018
CHECKED	--	
ENG APPR.	--	
MFG APPR.	--	

Description:
OreSat reaction wheel

Copyright 2018
Portland State Aerospace Society
Licensed under CERN OHL v.1.2

UNLESS OTHERWISE SPECIFIED:
DIMENSIONS ARE IN MILLIMETERS
TOLERANCES: ± 0.127
UNLESS OTHERWISE SPECIFIED

MATERIAL: brass
FINISH: as machined
Weight: 15.5 g
DO NOT SCALE DRAWING

COMMENTS:
--

DWG. NO. --
REV: i
SIZE: A
SCALE: 2:1
SHEET 1 OF 1

SOLIDWORKS Educational Product. For Instructional Use Only.