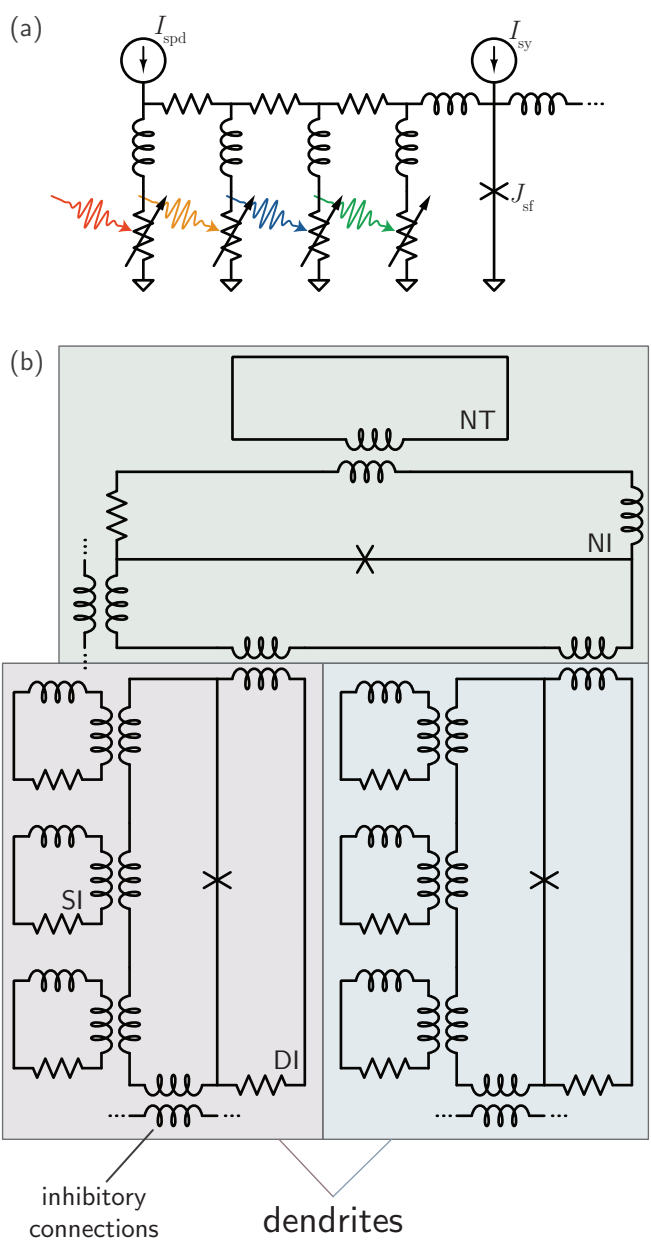
(a)
I_{spd}
I_{sy}
J_{sf}
(b)
NT
NI
SI
DI
inhibitory connections
dendrites