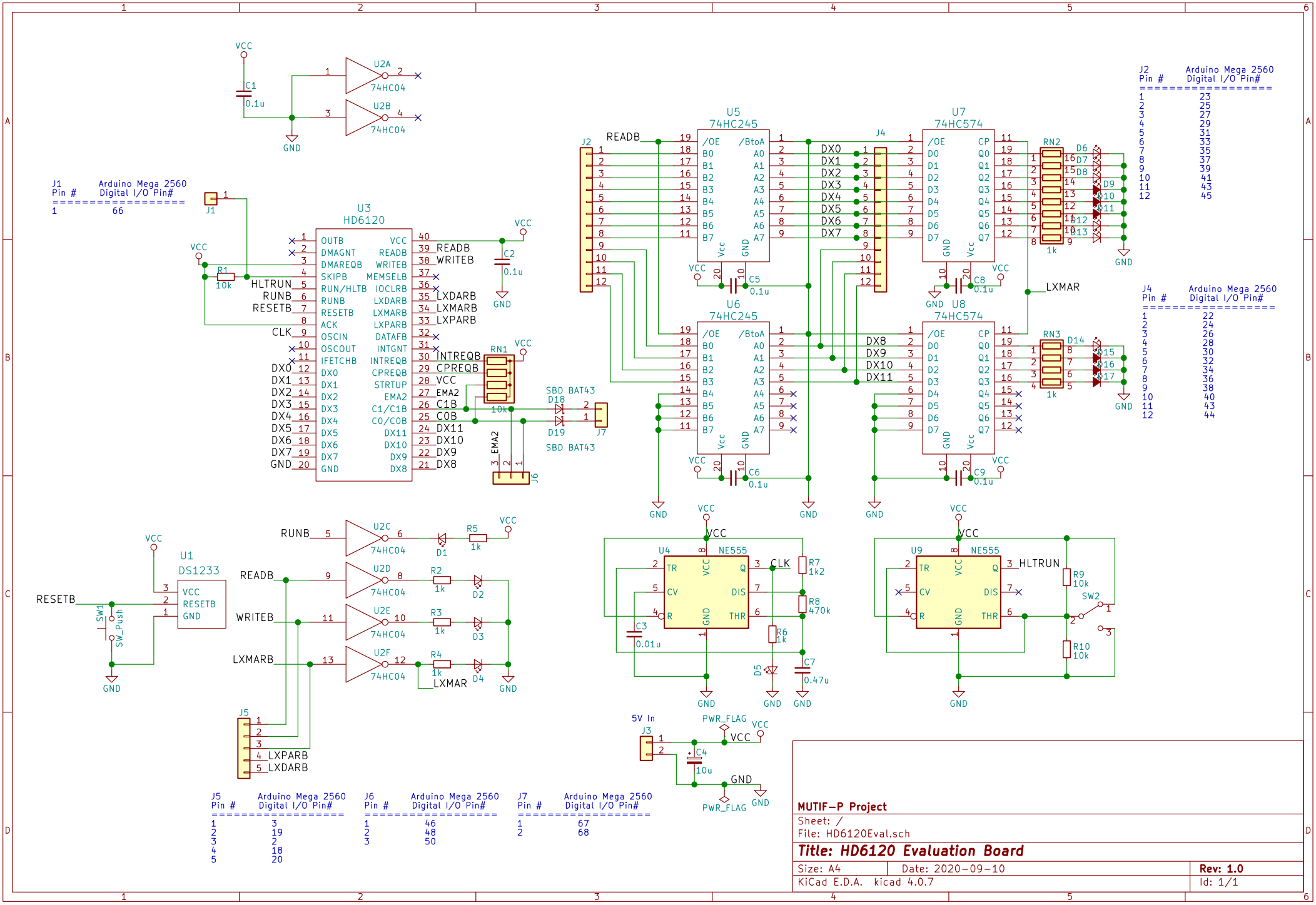

J1 Pin #	Arduino Mega 2560 Digital I/O Pin#
1	66

J2 Pin #	Arduino Mega 2560 Digital I/O Pin#
1	23
2	25
3	27
4	29
5	31
6	33
7	35
8	37
9	39
10	41
11	43
12	45

J4 Pin #	Arduino Mega 2560 Digital I/O Pin#
1	22
2	24
3	26
4	28
5	30
6	32
7	34
8	36
9	38
10	40
11	43
12	44

J5 Pin #	Arduino Mega 2560 Digital I/O Pin#
1	3
2	19
3	2
4	18
5	20

J6 Pin #	Arduino Mega 2560 Digital I/O Pin#
1	46
2	48
3	50

J7 Pin #	Arduino Mega 2560 Digital I/O Pin#
1	67
2	68

MUTIF-P Project

Sheet: /

File: HD6120Eval.sch

Title: HD6120 Evaluation Board

Size: A4	Date: 2020-09-10	**Rev: 1.0**
KiCad E.D.A. kicad 4.0.7		Id: 1/1