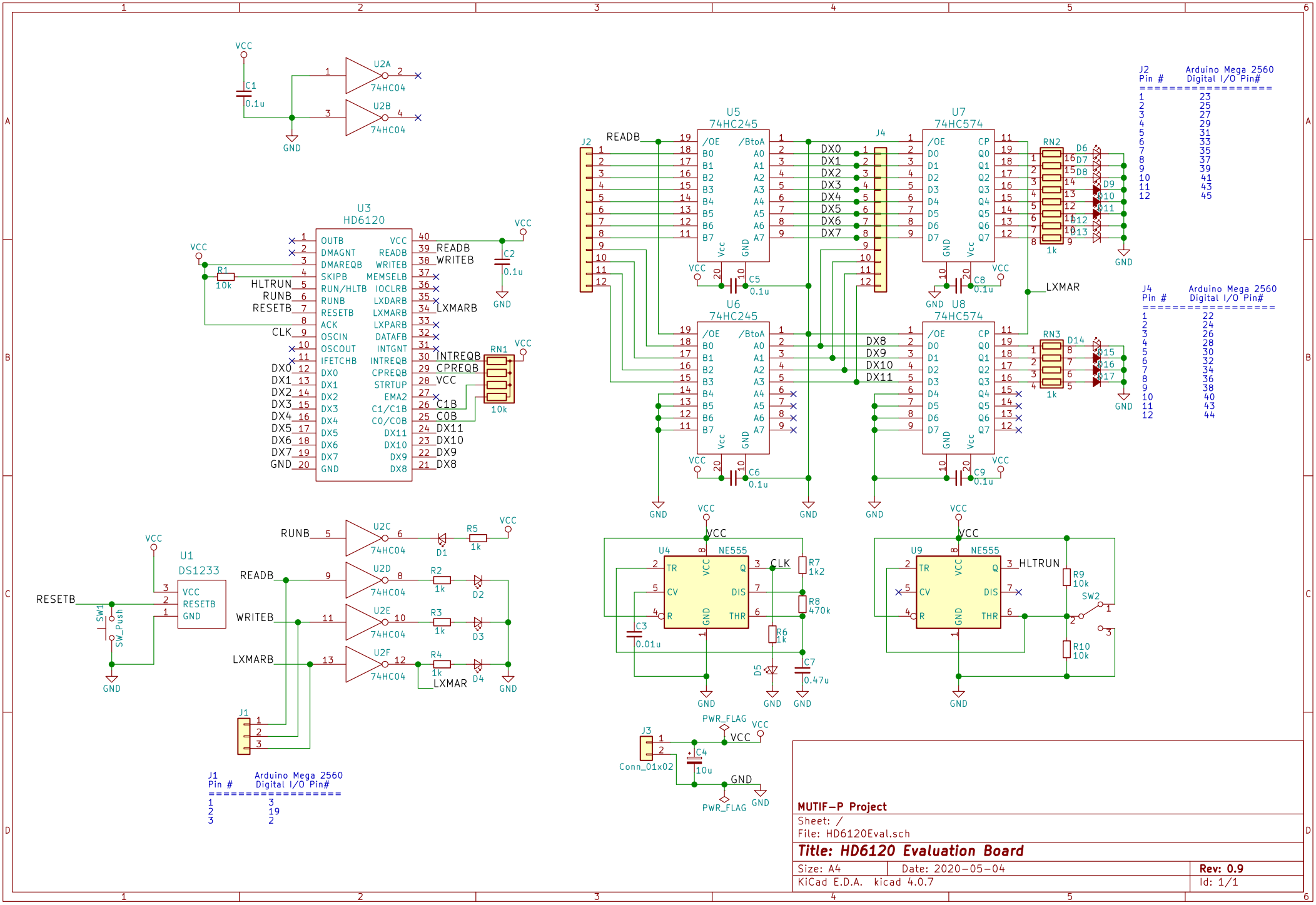
U2A
74HC04
U2B
74HC04
C1
0.1u
U3
HD6120
OUTB
DMAGNT
DMAREQB
SKIPB
RUN/HLTB
RUNB
RESETB
ACK
OSCIN
OSCOUT
IFETCHB
DX0
DX1
DX2
DX3
DX4
DX5
DX6
DX7
GND
VCC
READB
WRITEB
MEMSELB
IOCLRB
LXDARB
LXMARB
LXPARB
DATAFB
INTGNT
INTREQB
CPREQB
STRTUP
EMA2
C1/C1B
C0/C0B
DX11
DX10
DX9
DX8
R1
10k
C2
0.1u
RN1
10k
HLTRUN
CLK
INTREQB
CPREQB
C1B
C0B
U5
74HC245
U6
74HC245
/OE
/BtoA
B0
B1
B2
B3
B4
B5
B6
B7
A0
A1
A2
A3
A4
A5
A6
A7
C5
0.1u
C6
0.1u
J2
J4
DX0
DX1
DX2
DX3
DX4
DX5
DX6
DX7
DX8
DX9
DX10
DX11
U7
74HC574
U8
74HC574
/OE
CP
D0
D1
D2
D3
D4
D5
D6
D7
Q0
Q1
Q2
Q3
Q4
Q5
Q6
Q7
C8
0.1u
C9
0.1u
RN2
RN3
1k
D6
D7
D8
D9
D10
D11
D12
D13
D14
D15
D16
D17
LXMAR
J2 Pin # Arduino Mega 2560 Digital I/O Pin#
1 23
2 25
3 27
4 29
5 31
6 33
7 35
8 37
9 39
10 41
11 43
12 45
J4 Pin # Arduino Mega 2560 Digital I/O Pin#
1 22
2 24
3 26
4 28
5 30
6 32
7 34
8 36
9 38
10 40
11 43
12 44
U1
DS1233
VCC
RESETB
GND
SW1
SW_Push
U2C
U2D
U2E
U2F
74HC04
RUNB
READB
WRITEB
LXMARB
D1
D2
D3
D4
R5
1k
R2
1k
R3
1k
R4
1k
LXMAR
J1
U4
NE555
TR
CV
R
GND
Q
DIS
THR
CLK
R7
1k2
R8
470k
R6
1k
C3
0.01u
C7
0.47u
D5
U9
NE555
HLTRUN
R9
10k
R10
10k
SW2
J3
Conn_01x02
C4
10u
PWR_FLAG
J1 Pin # Arduino Mega 2560 Digital I/O Pin#
1 3
2 19
3 2
MUTIF-P Project
Sheet: /
File: HD6120Eval.sch
Title: HD6120 Evaluation Board
Size: A4
Date: 2020-05-04
Rev: 0.9
KiCad E.D.A. kicad 4.0.7
Id: 1/1