# HYDROPHONE DIRECTIVITY

TELEDYNE RESON
Everywhereyoulook™

| | |
|---|---|
| Under Test: | TC4032-2 |
| S/N: | 2820002 |
| Reference: | TC4033 |
| Date: | 2020-09-01 |
| Session, Run: | 30888, 5 |
| Max RR: | -173.6 dB re 1µPa/V at 1m |
| SL Right: | 10.0°, -0.2dB dB re 1µPa/V at 1m |
| Comment: | Horizontal. |

| | |
|---|---|
| Amplitude: | 10.0 Vrms |
| Pulse Width: | 150.0 µs |
| Angle: | -180.0° to 180.0° |
| Frequency: | 100.00 kHz |

| | |
|---|---|
| Temperature: | 24.14°C |
| Depth: | 1.2 m |
| Distance: | 0.60 m |
| Tested by: | PRA |

For all plots:
2020-09-01 PRA

3 Sept. 2020

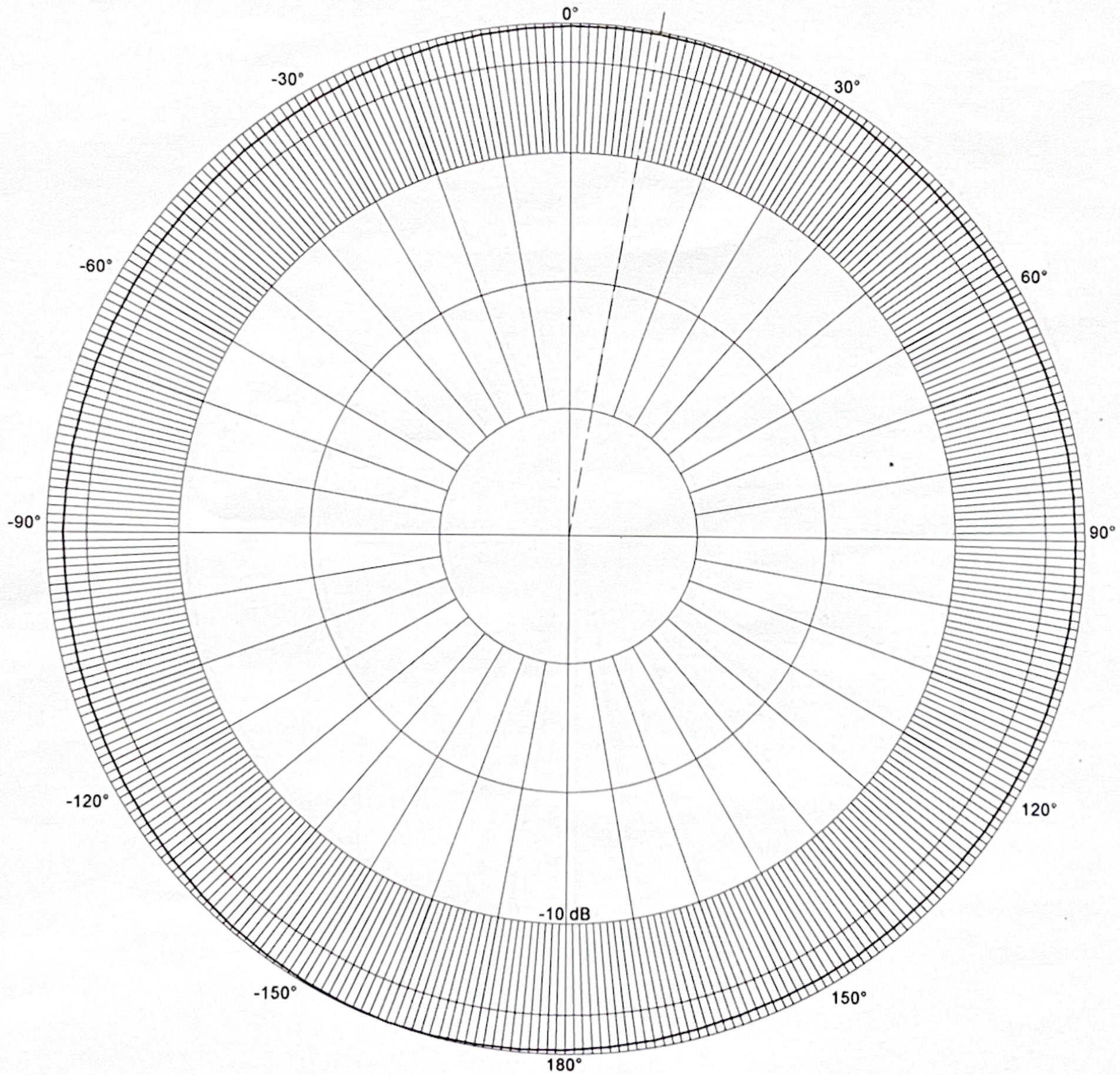

# HYDROPHONE DIRECTIVITY

TELEDYNE RESON
Everywhereyoulook™

| | |
|---|---|
| Under Test: | TC4032-2 |
| S/N: | 2820002 |
| Reference: | TC4033 |
| Date: | 2020-09-01 |
| Session, Run: | 30886, 1 |
| Max RR: | -171.3 dB re 1µPa/V at 1m |
| W: | 333.0° |
| Comment: | Vertical. |

| | |
|---|---|
| Amplitude: | 10.0 Vrms |
| Pulse Width: | 800.0 µs |
| Angle: | -180.0° to 180.0° |
| Frequency: | 15.00 kHz |

| | |
|---|---|
| Temperature: | 24.14°C |
| Depth: | 1.2 m |
| Distance: | 0.60 m |
| Tested by: | PRA |

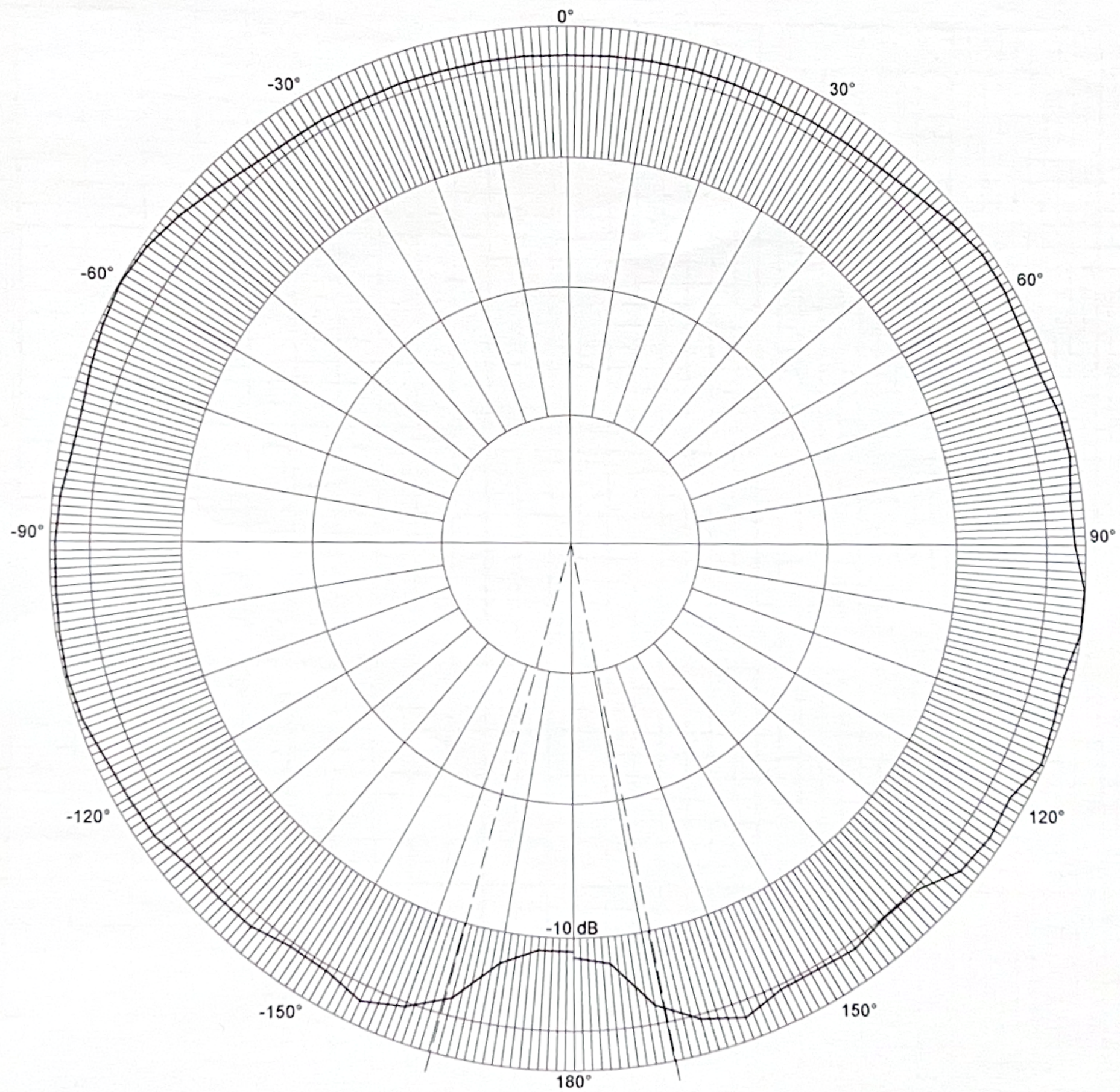

# HYDROPHONE SENSITIVITY

TELEDYNE RESON
Everywhereyoulook™

| | | | | | |
|---|---|---|---|---|---|
| Under Test: | TC4032-2 | Amplitude: | 10.0 Vrms | Temperature: | °C |
| S/N: | 2820002 | Pulse Width: | 214.3 µs | Depth: | 0.0 m |
| Reference: | | Rep Rate: | 50.0 ms | Distance: | 0.00 m |
| Date: | 2020-09-01 | Averages: | 8 | Tested by: | PRA |
| Session, Run: | 30888, 6 | | | | |
| Comment: | PHO @ 250 Hz: -170.8 dB. | | | | |

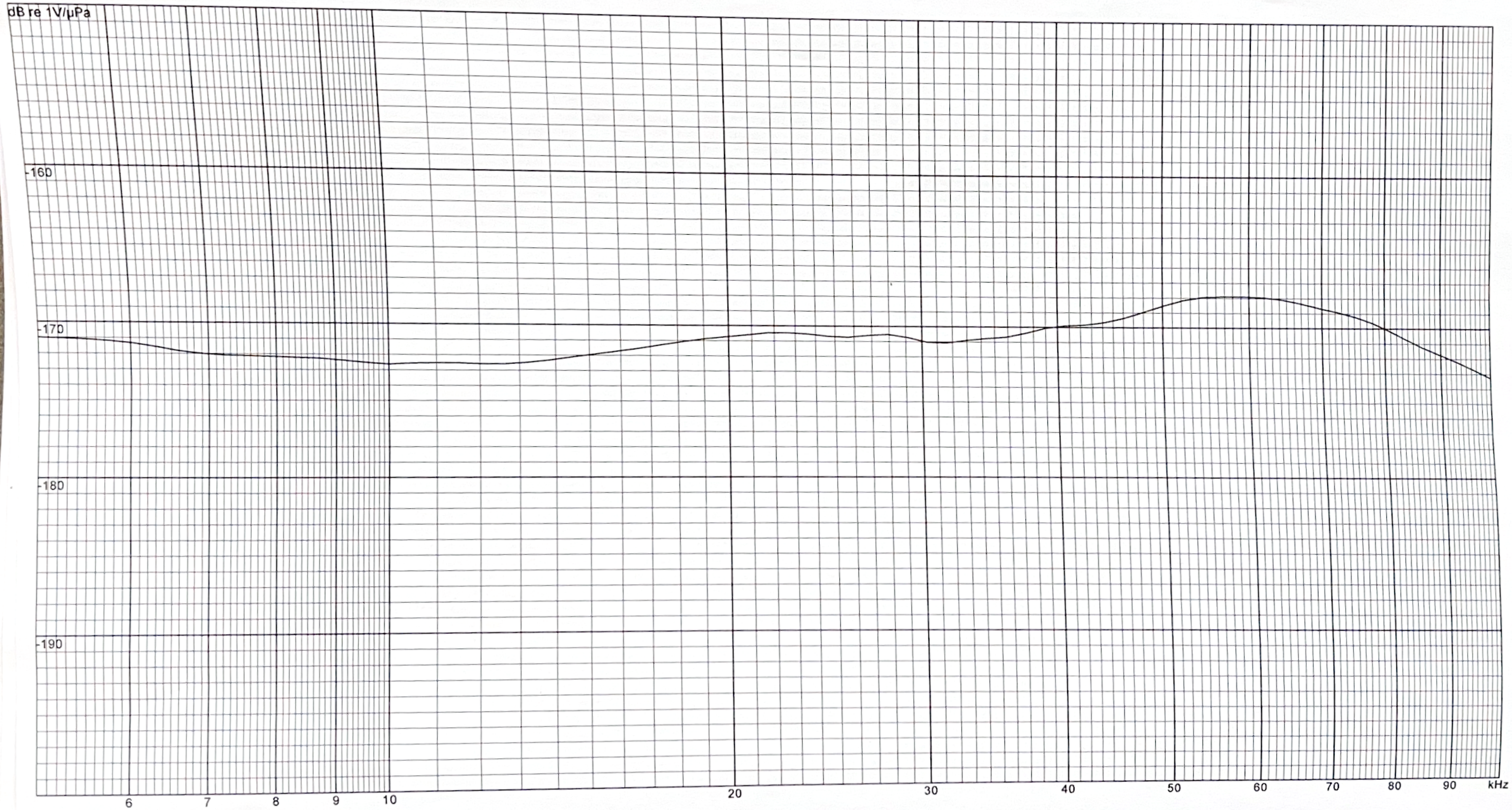

# HYDROPHONE DIRECTIVITY

TELEDYNE RESON
Everywhereyoulook™

| | |
|---|---|
| Under Test: | TC4032-2 |
| S/N: | 2820003 |
| Reference: | TC4033 |
| Date: | 2020-09-01 |
| Session, Run: | 30888, 10 |
| Max RR: | -173.7 dB re 1µPa/V at 1m |
| SL Right: | 70.0°, -0.2dB dB re 1µPa/V at 1m |
| Comment: | Horizontal. |

| | |
|---|---|
| Amplitude: | 10.0 Vrms |
| Pulse Width: | 150.0 µs |
| Angle: | -180.0° to 180.0° |
| Frequency: | 100.00 kHz |

| | |
|---|---|
| Temperature: | 24.14°C |
| Depth: | 1.2 m |
| Distance: | 0.60 m |
| Tested by: | PRA |

For all plots:
2020-09-01 PRA

3 sept. 2020

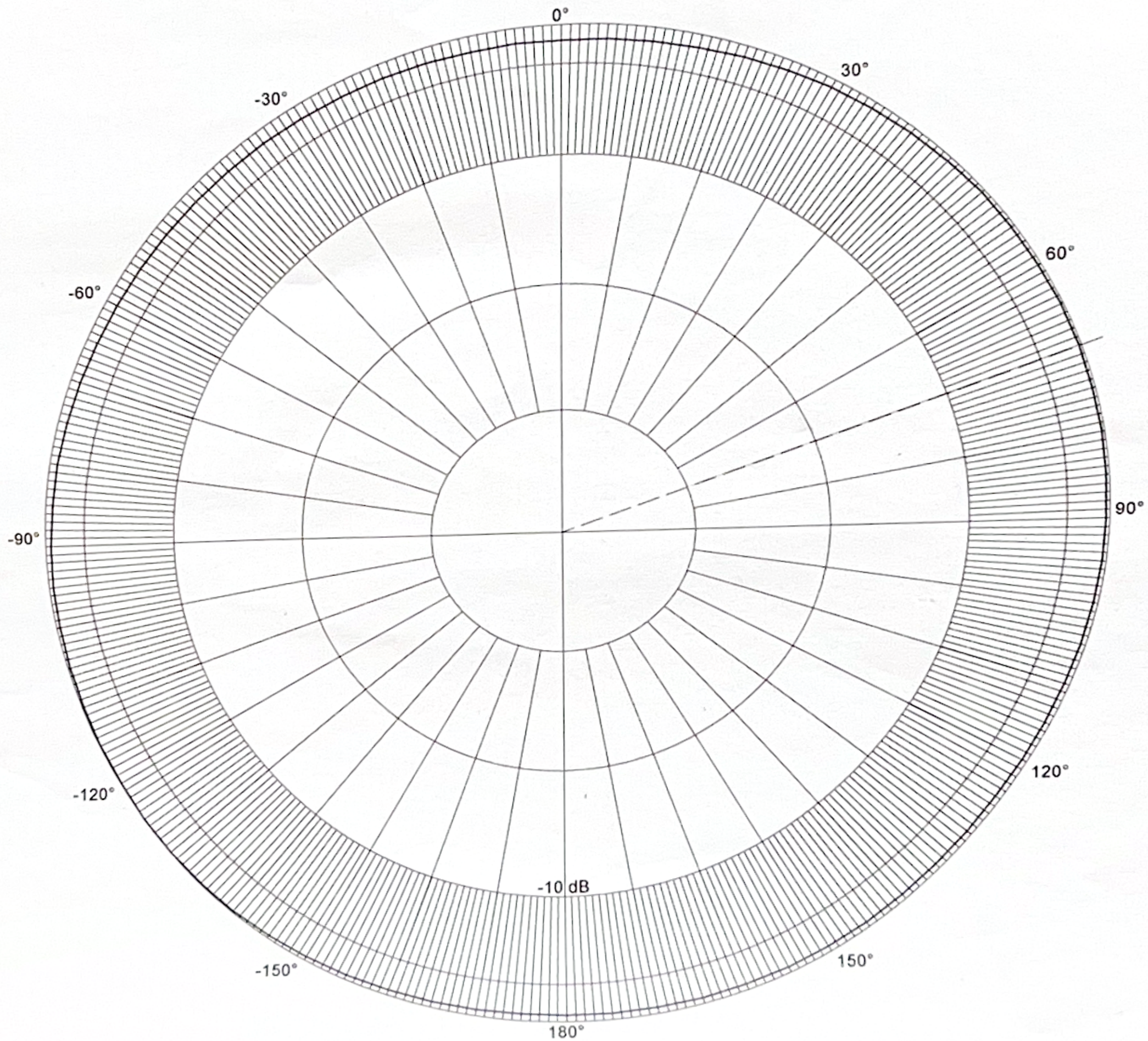

# HYDROPHONE DIRECTIVITY

TELEDYNE RESON
Everywhereyoulook™

| | |
|---|---|
| Under Test: | TC4032-2 |
| S/N: | 2820003 |
| Reference: | TC4033 |
| Date: | 2020-09-01 |
| Session, Run: | 30886, 2 |
| Max RR: | -171.7 dB re 1µPa/V at 1m |
| W: | 338.0° |
| Comment: | Vertical. |

| | |
|---|---|
| Amplitude: | 10.0 Vrms |
| Pulse Width: | 800.0 µs |
| Angle: | -180.0° to 180.0° |
| Frequency: | 15.00 kHz |

| | |
|---|---|
| Temperature: | 24.14°C |
| Depth: | 1.2 m |
| Distance: | 0.60 m |
| Tested by: | PRA |

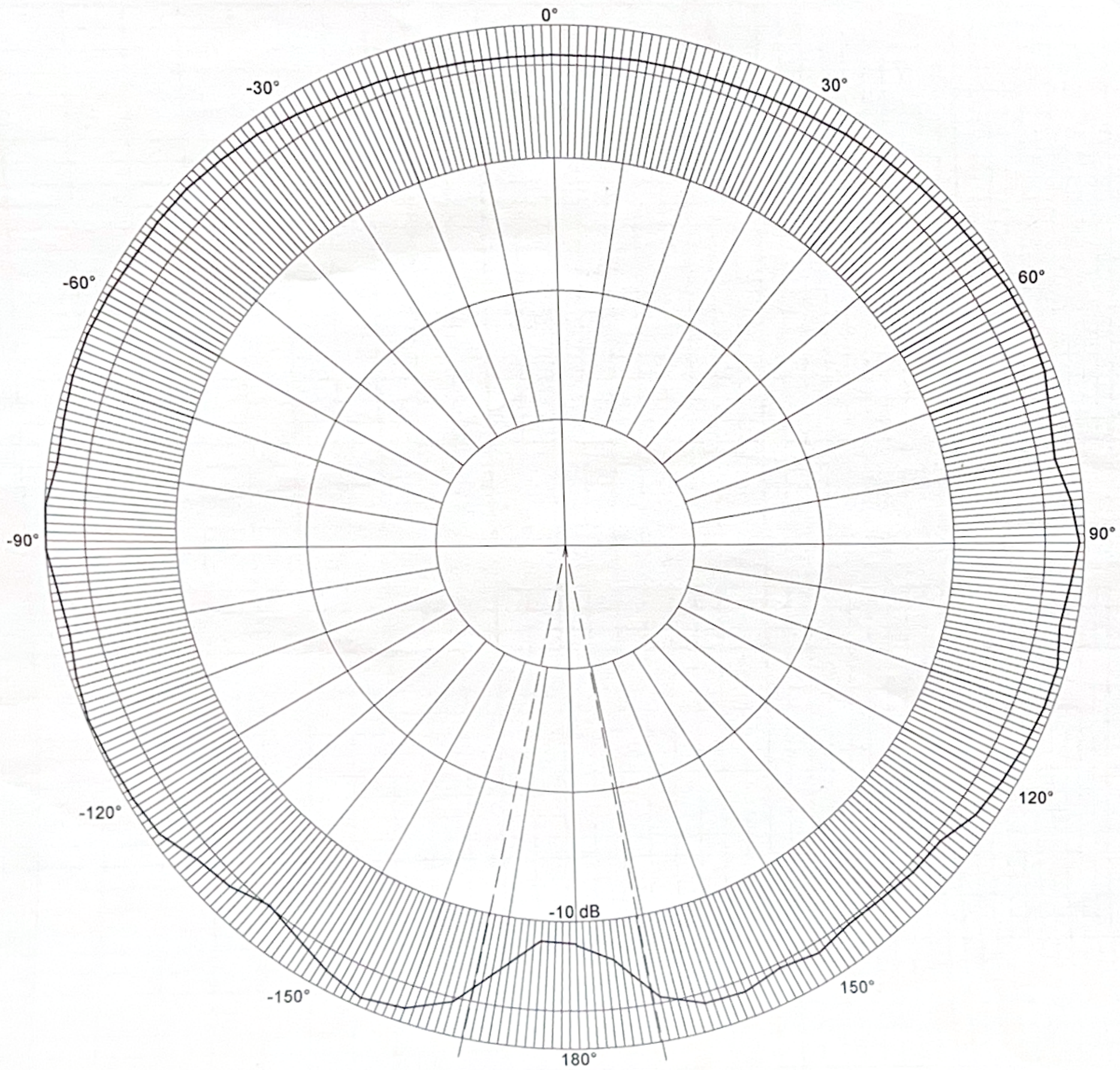

# HYDROPHONE SENSITIVITY

TELEDYNE RESON
Everywhereyoulook™

| | |
|---|---|
| Under Test: | TC4032-2 |
| S/N: | 2820003 |
| Reference: | |
| Date: | 2020-09-01 |
| Session, Run: | 30888, 11 |
| Comment: | PHO @ 250 Hz: -170.8 dB. |

| | |
|---|---|
| Amplitude: | 10.0 Vrms |
| Pulse Width: | 214.3 µs |
| Rep Rate: | 50.0 ms |
| Averages: | 8 |

| | |
|---|---|
| Temperature: | °C |
| Depth: | 0.0 m |
| Distance: | 0.00 m |
| Tested by: | PRA |

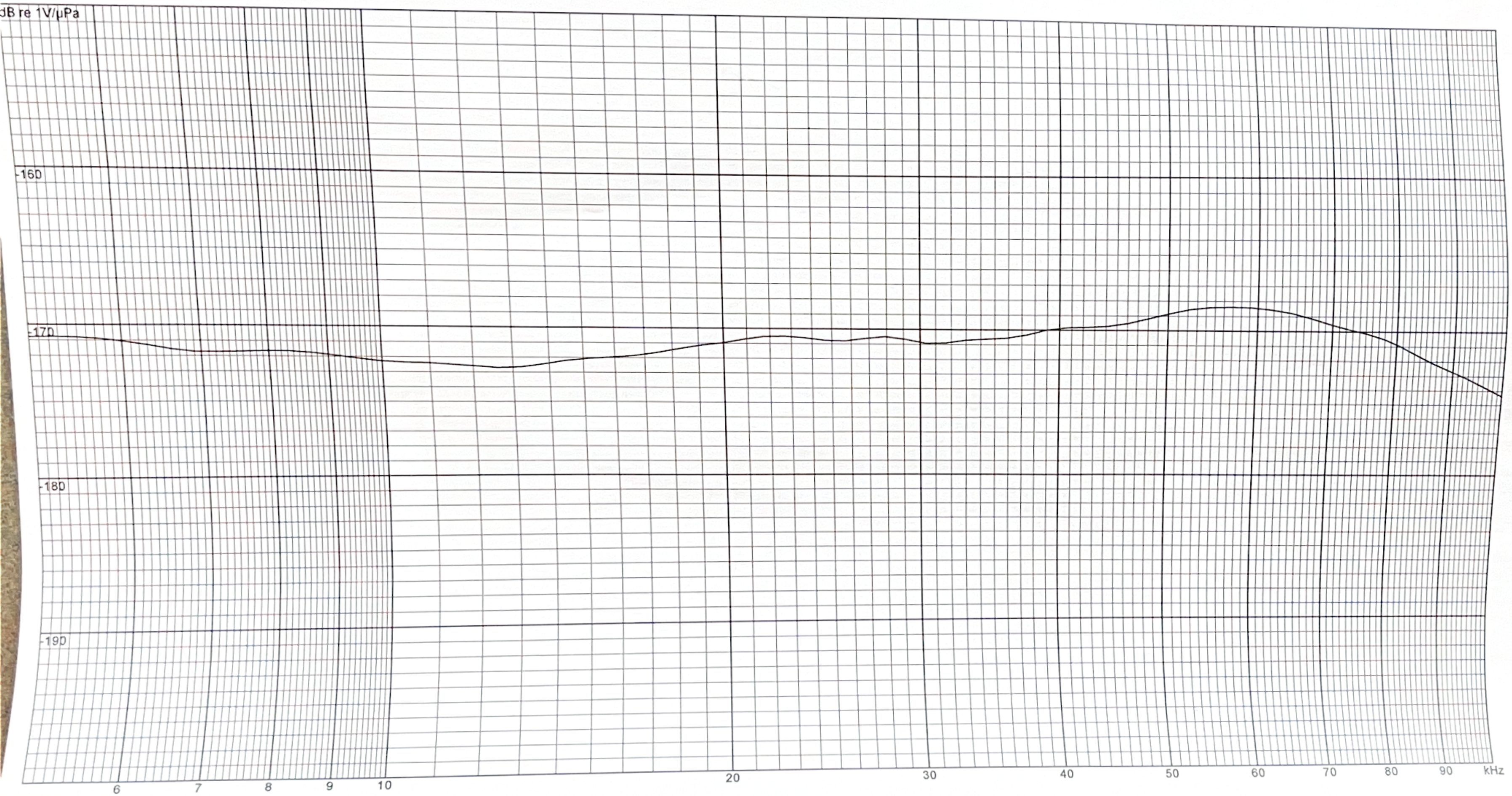

# HYDROPHONE DIRECTIVITY

TELEDYNE RESON
Everywhereyoulook™

| | | | | | |
|---|---|---|---|---|---|
| Under Test: | TC4032-2 | Amplitude: | 10.0 Vrms | Temperature: | 24.14°C |
| S/N: | 2820001 | Pulse Width: | 150.0 µs | Depth: | 1.2 m |
| Reference: | TC4033 | Angle: | -180.0° to 180.0° | Distance: | 0.60 m |
| Date: | 2020-09-01 | Frequency: | 100.00 kHz | Tested by: | PRA |
| Session, Run: | 30888, 1 | | | | |
| Max RR: | -173.0 dB re 1µPa/V at 1m | | | | |
| SL Right: | 20.0°, -0.2dB dB re 1µPa/V at 1m | | | | |
| Comment: | Horizontal. | | | | |

For all plots:
2020-09-01 PRA

3 sept 2020

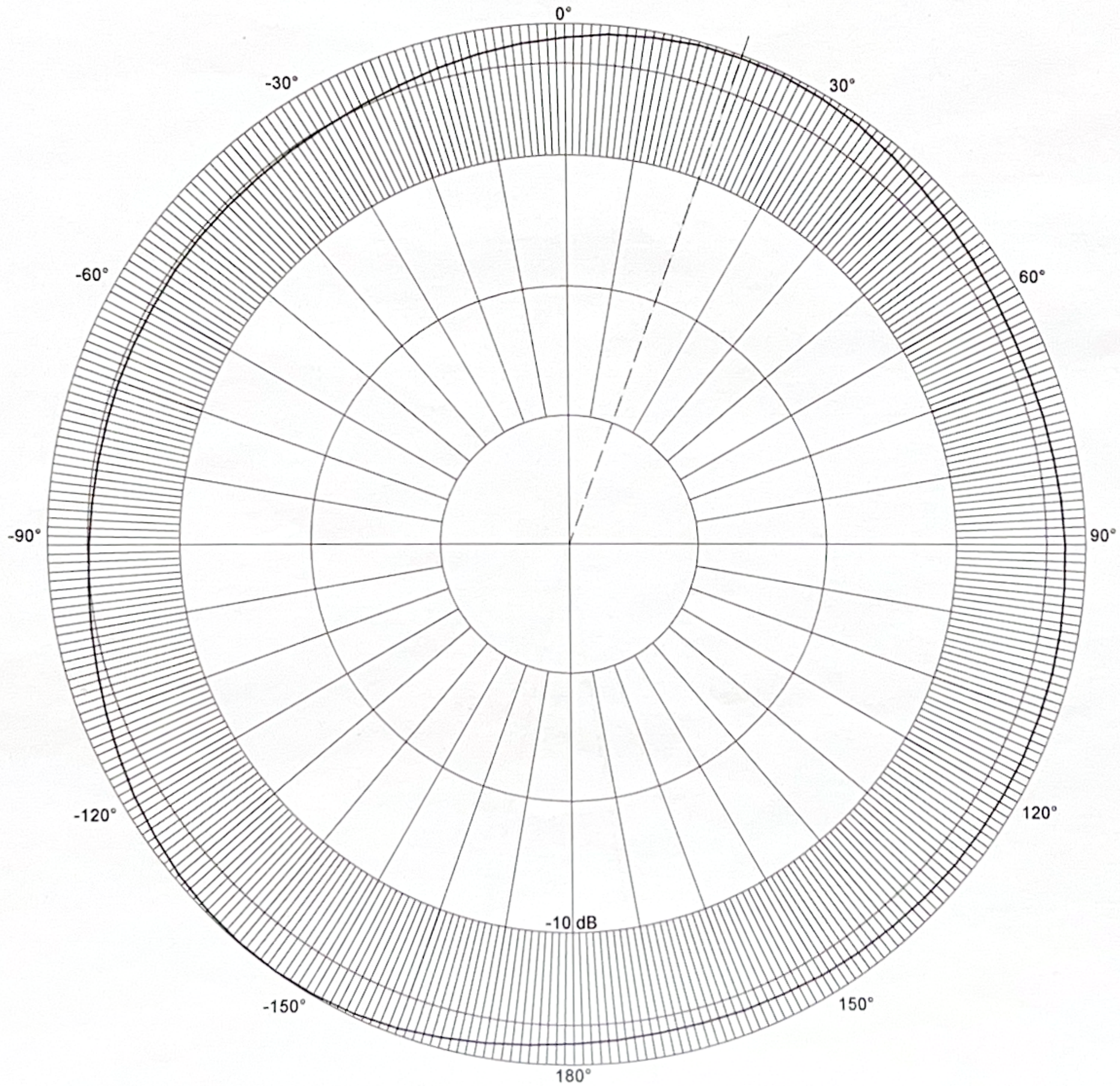

# HYDROPHONE DIRECTIVITY

TELEDYNE RESON
Everywhereyoulook™

| | |
|---|---|
| Under Test: | TC4032-2 |
| S/N: | 2820001 |
| Reference: | TC4033 |
| Date: | 2020-09-01 |
| Session, Run: | 30886, 3 |
| Max RR: | -171.3 dB re 1μPa/V at 1m |
| W: | 338.4° |
| Comment: | Vertical. |

| | |
|---|---|
| Amplitude: | 10.0 Vrms |
| Pulse Width: | 800.0 μs |
| Angle: | -180.0° to 180.0° |
| Frequency: | 15.00 kHz |

| | |
|---|---|
| Temperature: | 24.14°C |
| Depth: | 1.2 m |
| Distance: | 0.60 m |
| Tested by: | PRA |

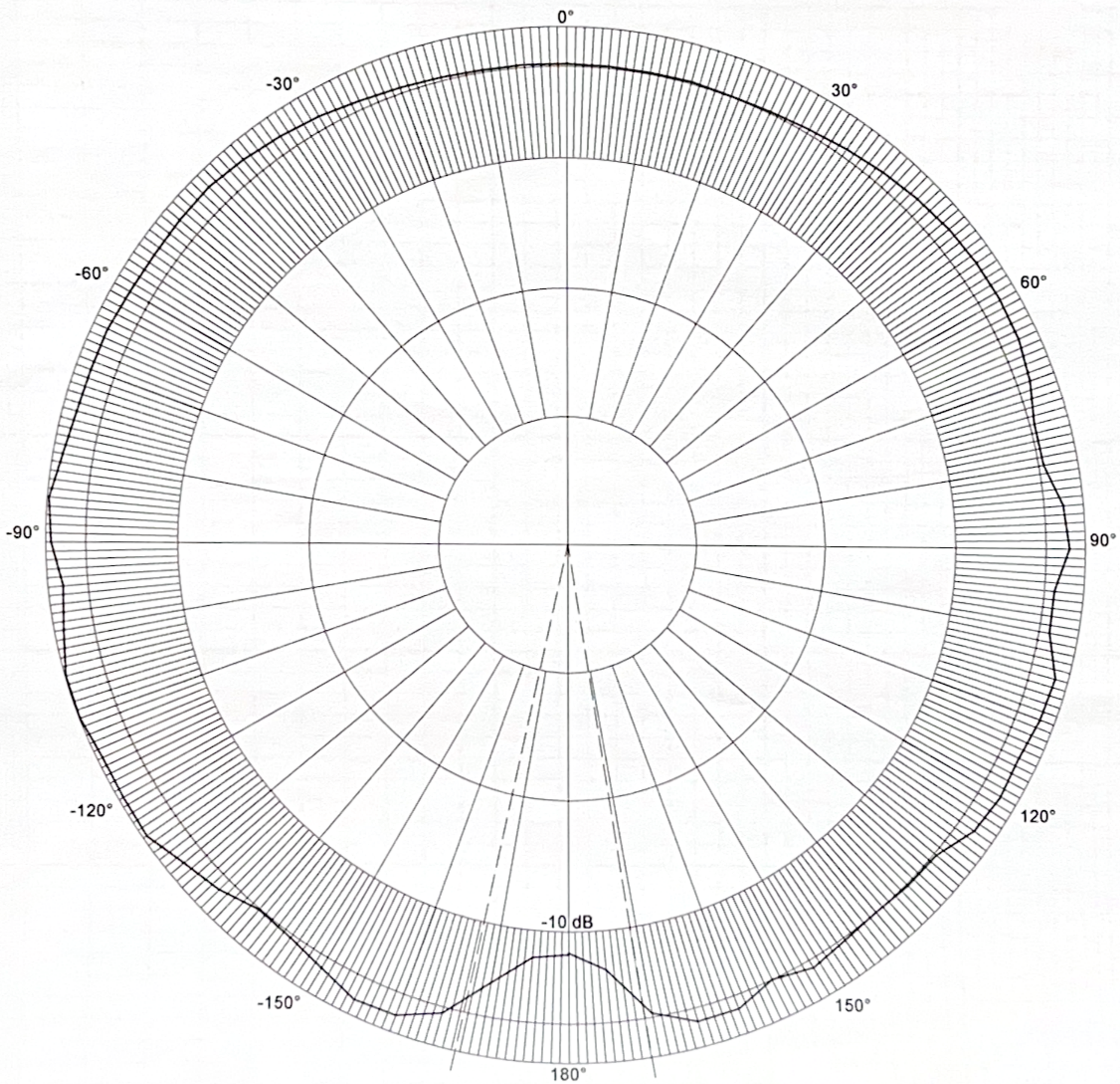

# HYDROPHONE SENSITIVITY

TELEDYNE RESON
Everywhereyoulook™

| | | | | | |
|---|---|---|---|---|---|
| Under Test: | TC4032-2 | Amplitude: | 10.0 Vrms | Temperature: | °C |
| S/N: | 2820001 | Pulse Width: | 214.3 µs | Depth: | 0.0 m |
| Reference: | | Rep Rate: | 50.0 ms | Distance: | 0.00 m |
| Date: | 2020-09-01 | Averages: | 8 | Tested by: | PRA |
| Session, Run: | 30888, 2 | | | | |
| Comment: | PHO @ 250 Hz: -170.7 dB. | | | | |

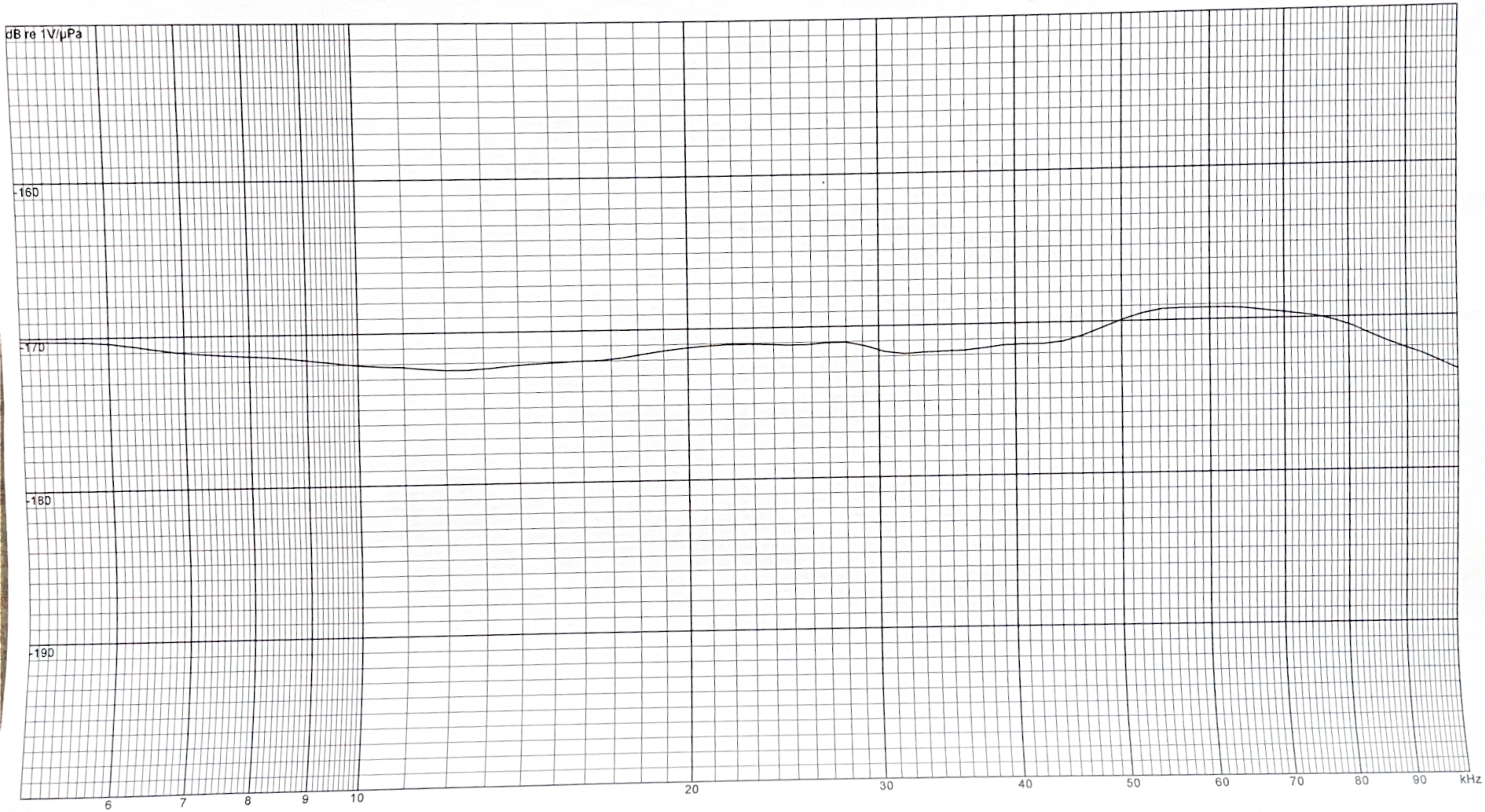

# HYDROPHONE DIRECTIVITY

For all Three Pages
07 OKT. 2014

| | |
|---|---|
| Under Test: | TC4032-2 |
| S/N: | 3014010 |
| Reference: | TC4033 |
| Date: | 2014-10-07 |
| Session, Run: | 20821, 13 |
| Max RR: | -175.8 dB re 1µPa/V at 1m |
| SL Right: | 10.0°, 0.0dB dB re 1µPa/V at 1m |
| Comment: | Horizontal. |

| | |
|---|---|
| Amplitude: | 10.0 Vrms |
| Pulse Width: | 150.0 µs |
| Angle: | -180.0° to 180.0° |
| Frequency: | 100.00 kHz |

| | |
|---|---|
| Temperature: | 23.52°C |
| Depth: | 1.2 m |
| Distance: | 0.60 m |
| Tested by: | JHP |

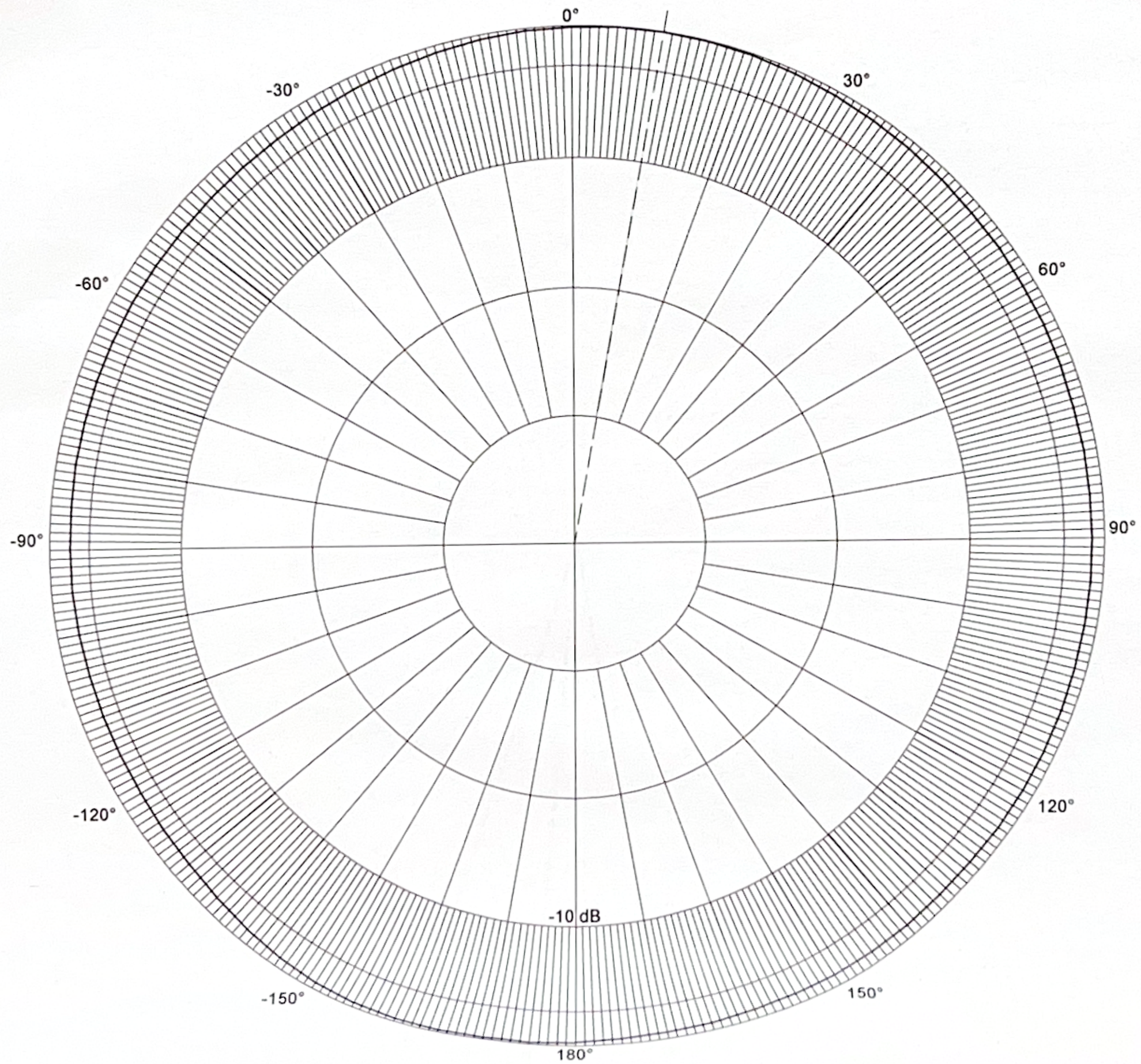

# HYDROPHONE DIRECTIVITY

| | |
|---|---|
| Under Test: | TC4032-2 |
| S/N: | 3014010 |
| Reference: | TC4033 |
| Date: | 2014-10-06 |
| Session, Run: | 20819, 5 |
| Max RR: | -170.1 dB re 1µPa/V at 1m |
| W: | 332.1° |
| SL Left: | -175.0°, -6.8dB dB re 1µPa/V at 1m |
| Comment: | Vertical. |

| | |
|---|---|
| Amplitude: | 10.0 Vrms |
| Pulse Width: | 800.0 µs |
| Angle: | -180.0° to 180.0° |
| Frequency: | 15.00 kHz |

| | |
|---|---|
| Temperature: | 23.57°C |
| Depth: | 1.2 m |
| Distance: | 0.60 m |
| Tested by: | JHP |

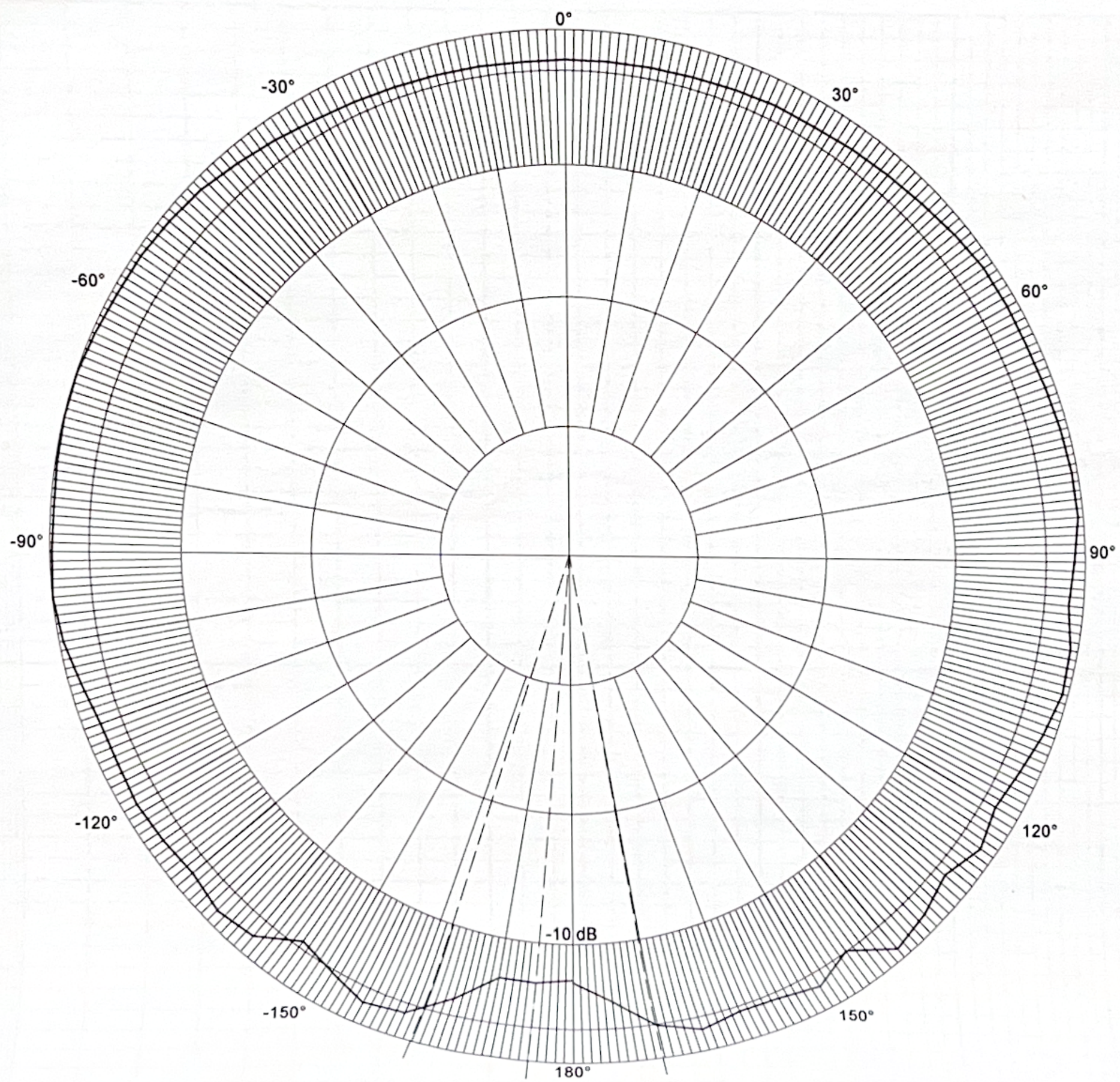

# HYDROPHONE SENSITIVITY
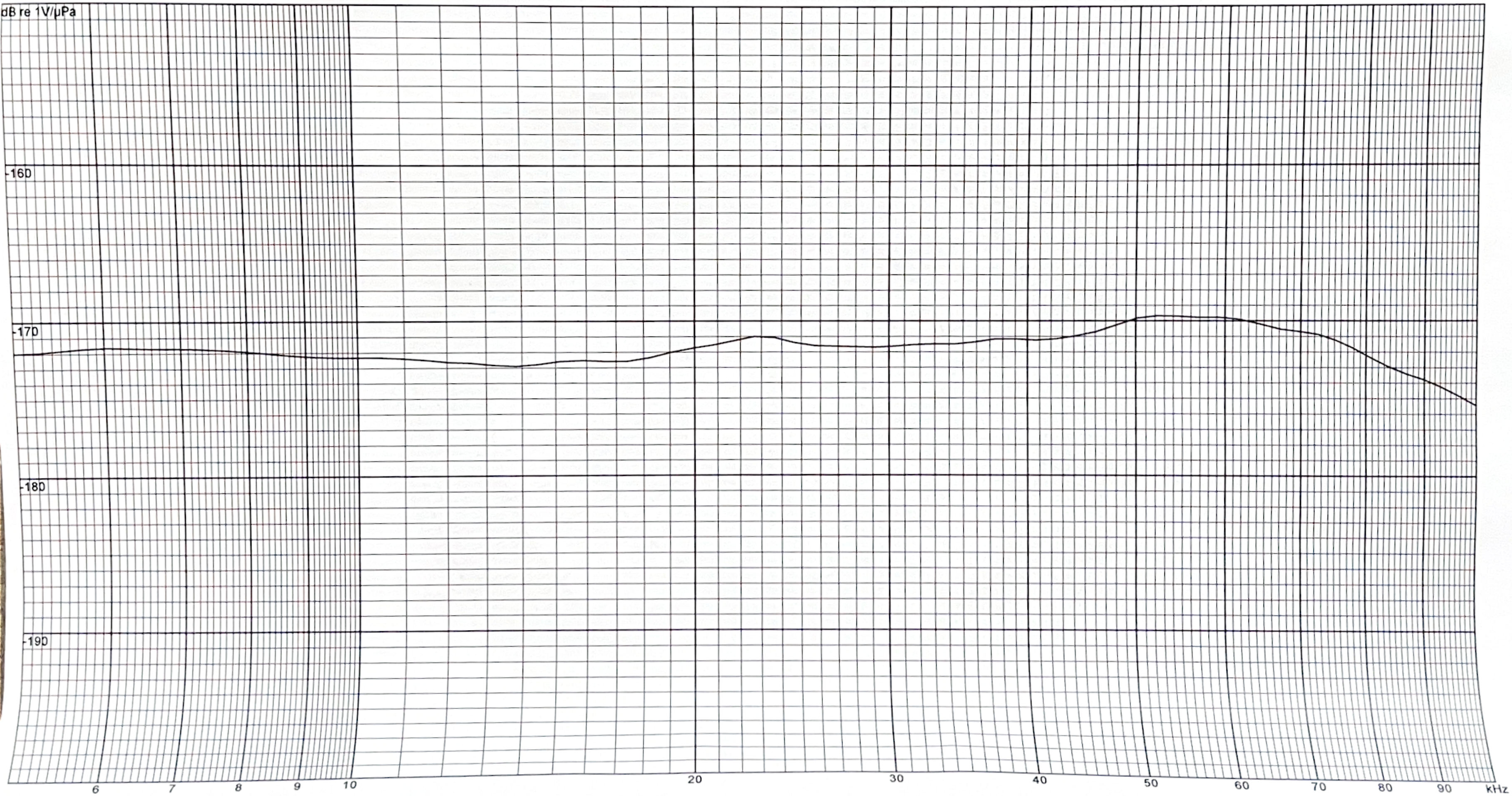
| | | | | | |
|---|---|---|---|---|---|
| Under Test: | TC4032-2 | Amplitude: | 5.0 Vrms | *Temperature:* | *23.52°C* |
| S/N: | 3014010 | Pulse Width: | 820.0 µs | *Depth:* | *1.2 m* |
| Reference: | ITC | Rep Rate: | 109.9 ms | *Distance:* | *0.60 m* |
| Date: | 2014-10-07 | Averages: | 8 | *Tested by:* | *JHP* |
| Session, Run: | 20821, 16 | | | | |
| Comment: | PHO @ 250 Hz. : -173,2 dB. | | | | |