## 3V3 regulator

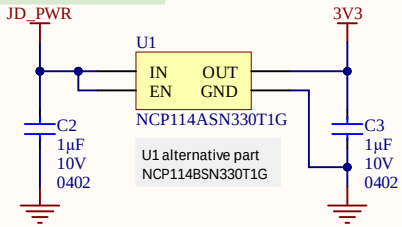


U1 alternative part
NCP114BSN330T1G

## Programming/debug connector

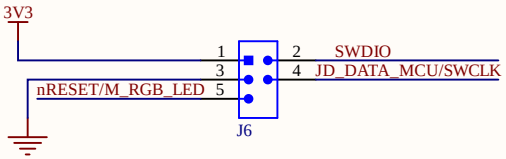


WS2812E RGB LED VIH min 0.7VDD. Since powered from JD_Power it requires 3.3V to 5V level shifter

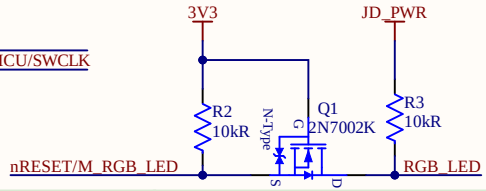


## RGB LEDs

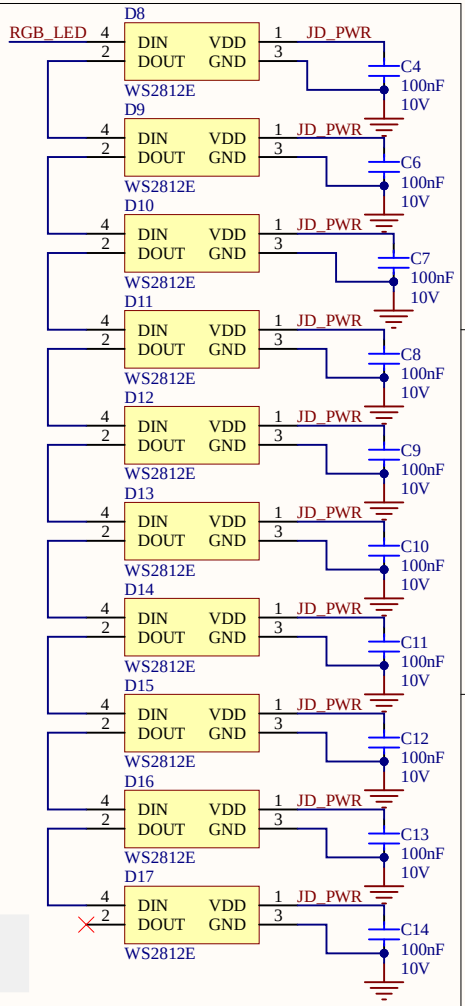


RGB LEDs are powered directly from JD_PWR to leverage higher voltage.

## Jacdac connector

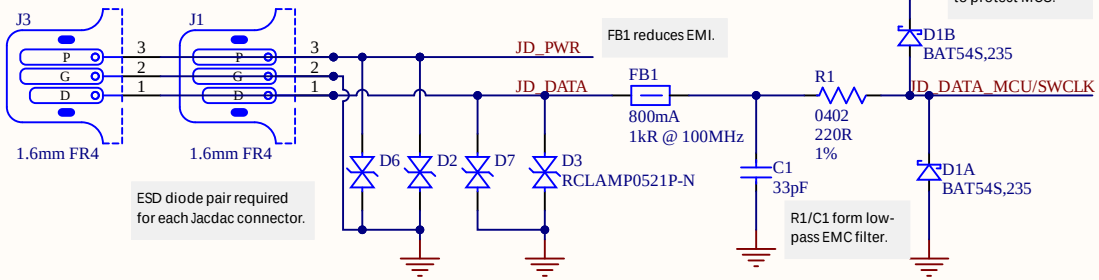


FB1 reduces EMI.

D1 clamps JD_DATA to protect MCU.

ESD diode pair required for each Jacdac connector.

R1/C1 form low-pass EMC filter.

## Mounting holes

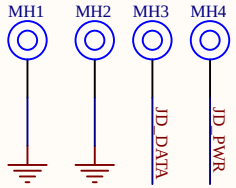


JACDAC mounting holes are plated through hole, finished diameter of 2.1mm, annular ring of 3.0mm diameter and copper/component keepout of 5.0mm. The mounting holes should be on 2.5mm pitch.

MH1 & MH2 : GND
MH3 : JD_DATA
MH4 : JD_PWR

Mounting holes should have appropriate silkscreen marker, and MH1 should have a pin 1 marker on the top side.

Jacdac modules require mounting holes. Modules mounting holes are electrically connected so that modules can be mounted on top of other PCBs without using cables.

## MCU

U2 critical pin mappings:
PB6 USART1_TX for JD data

PB8 TIM17_CH1 for RGB_G
PA10 for RGB_R
PA8 TIM1_CH1 for RGB_B

More pin mapping:
PA0 RGB Control data signal input

JD_DATA doesn't need WAKEUP pin because deepest sleep isn't used.

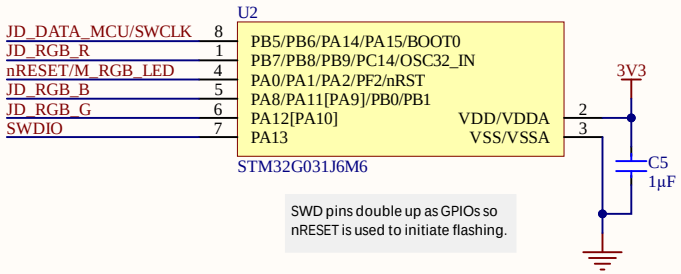


SWD pins double up as GPIOs so nRESET is used to initiate flashing.

## Status LED

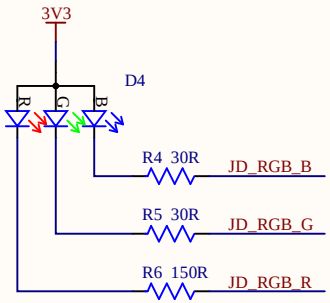


Jacdac modules require a status LED.

The LED can be monochrome or multicolor depending on GPIO availability

Tuoahan TZ-P4-1615RGBTCA1-0.55T RGB is footrpint-compatible alternative for D6.

If using alternative part recalculate the resistor values R4-R6

Silkscreen & layout notes

Block name

Design notes

This information is provided "as-is". You bear the risk of using it. Some information relates to pre-released specification which may change without notice. Microsoft makes no warranties, express or implied, with respect to the information provided here.

When this PDF is viewed with Adobe Reader, clicking on components shows part numbers and other details.

| | | | |
|---|---|---|---|
| PROJECT FILENAME JacdacRgbLedBar10 58.PrjPCB | PROJECT CODENAME JacdacRgbLedBar10 | Microsoft | PROJECT DESCRIPTION Jacdac RGB module with 10x LEDs in a bar | SHEET DESCRIPTION Complete design |
| SHEET FILENAME JacdacRgbLedBar10 58.SchDoc | LICENCE Attribution 4.0 International (CC BY 4.0) | LAST MODIFIED 10/11/2021 | PAGE 1 OF 1 | DRAWN BY D. Gakure & S. Hodges | REVISION 0.2 | PCB ID 58-0.2 |