MCU

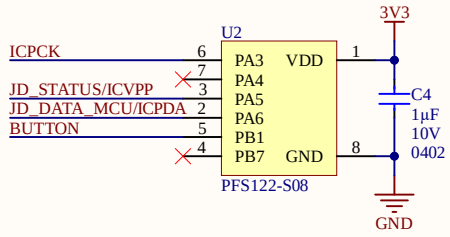

Button

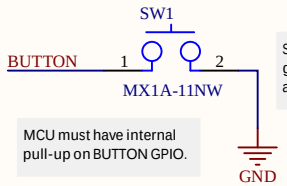

SW1 pin 4 is grounded to aid routing.

MCU must have internal pull-up on BUTTON GPIO.

Stamp holes

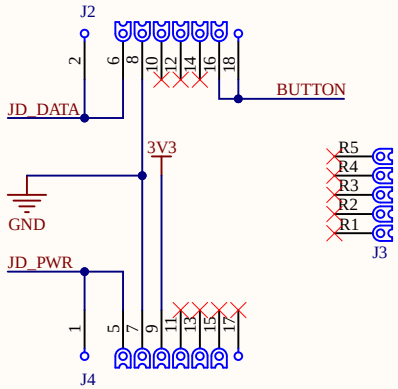

Status LED

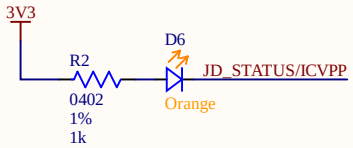

D6 alternative parts:
SML-D12D
E6C0603SEAC1UDA
NCD0603O1

Place a status LED adjacent to edge connector. If using alternative part check R2 value.

3V3 regulator

Consider using an LDO that is robust to spikes over 6V on input in case of noise on JD_PWR.

This component is a power-consumer.

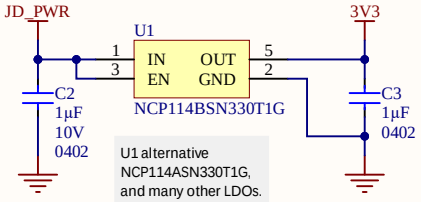

U1 alternative NCP114ASN330T1G, and many other LDOs.

Programming header

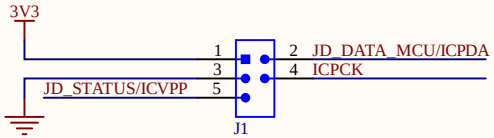

"JacConnect" programming adapter for PADAUK.
https://microsoft.github.io/jacdac-docs/ddk/firmware/jac-connect/

Jacdac connector

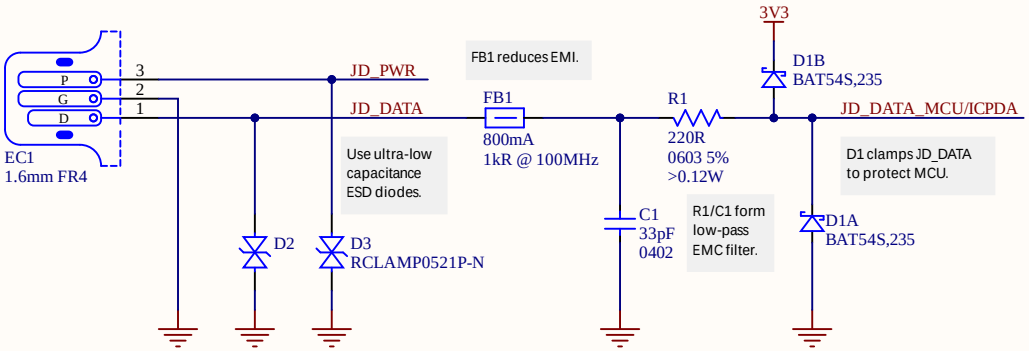

FB1 reduces EMI.

Use ultra-low capacitance ESD diodes.

R1/C1 form low-pass EMC filter.

D1 clamps JD_DATA to protect MCU.

This reference design is a guideline. Please refer to the Jacdac docs online at https://aka.ms/jacdac for the definitive and most up-to-date information.

Silkscreen should include manufacturer & module name and identify the version number and optionally a QR code.

This design uses the 'EC30' board shape.

Silkscreen & layout notes

Block name

Design notes

This information is provided "as-is". You bear the risk of using it. Some information relates to pre-released specification which may change without notice. Microsoft makes no warranties, express or implied, with respect to the information provided here.

When this PDF is viewed with Adobe Reader, clicking on components shows part numbers and other details.

PROJECT FILENAME JacdacKeycapButtonBc30 135.PrjPCB	PROJECT CODENAME JacdacKeycapButtonBc30	Microsoft	PROJECT DESCRIPTION Jacdac keyboard button for BC mounting		SHEET DESCRIPTION Complete design
SHEET FILENAME JacdacKeycapButtonBc30 135.SchDoc	LICENCE Attribution 4.0 International (CC BY 4.0)	LAST MODIFIED 25/11/2022	PAGE 1 OF 1	DRAWN BY SH	REVISION 0.2 PCB ID 135-0.2