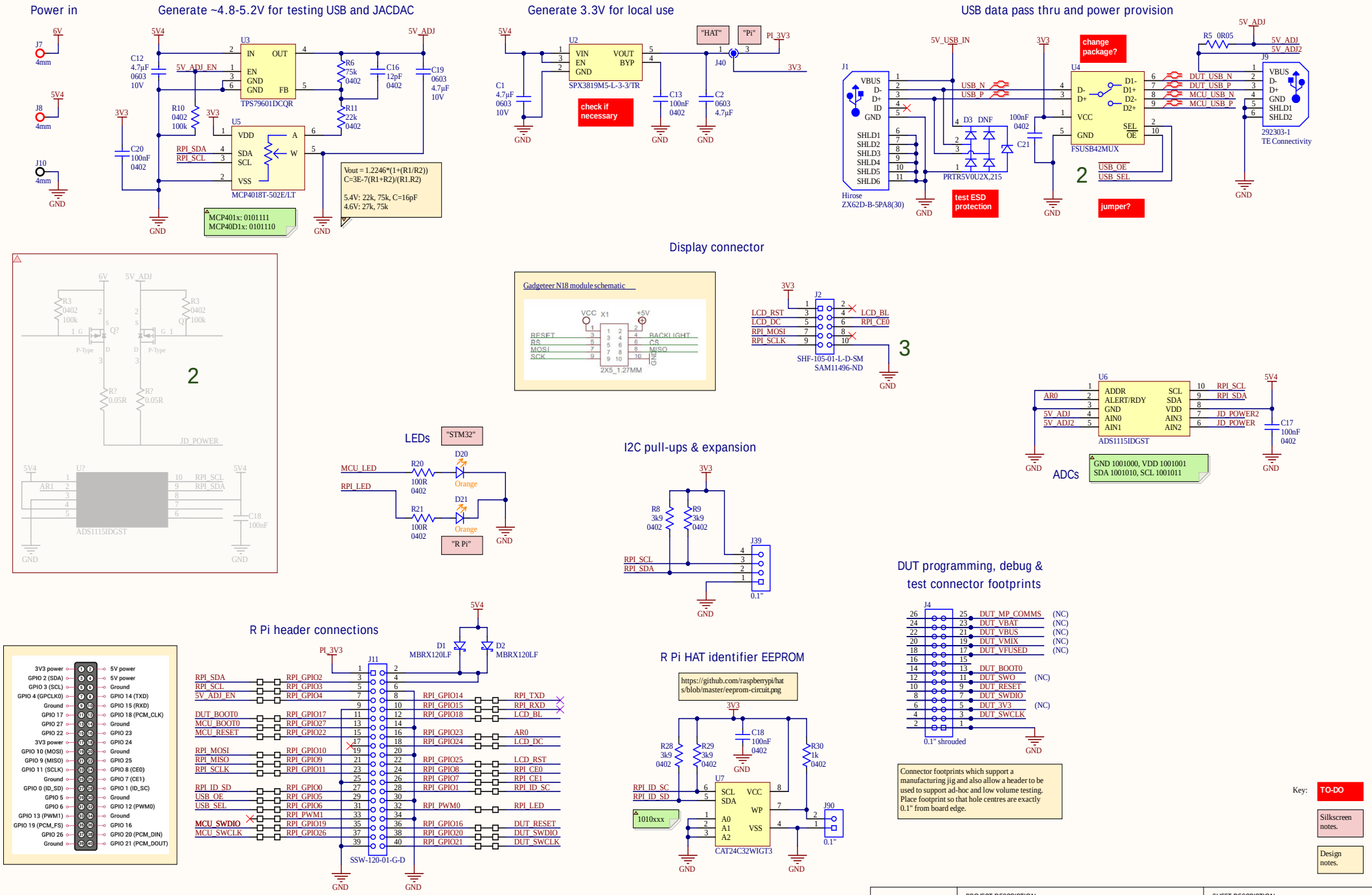

Microsoft	PROJECT DESCRIPTION MakeCode Arcade R Pi testing HAT						SHEET DESCRIPTION R Pi interface circuitry	
SHEET FILENAME ArcadeTestHAT 05-1.1 Pi interface.SchDoc	PROJECT FILENAME ArcadeTestHAT 05-1.1.PrjPCB	PROJECT CODENAME ArcadeTestHAT	LICENCE TBC	LAST MODIFIED 1/19/2021	PAGE 1 OF 2	DRAWN BY Steve Hodges	REVISION 1.1	PCB ID 05-1.1

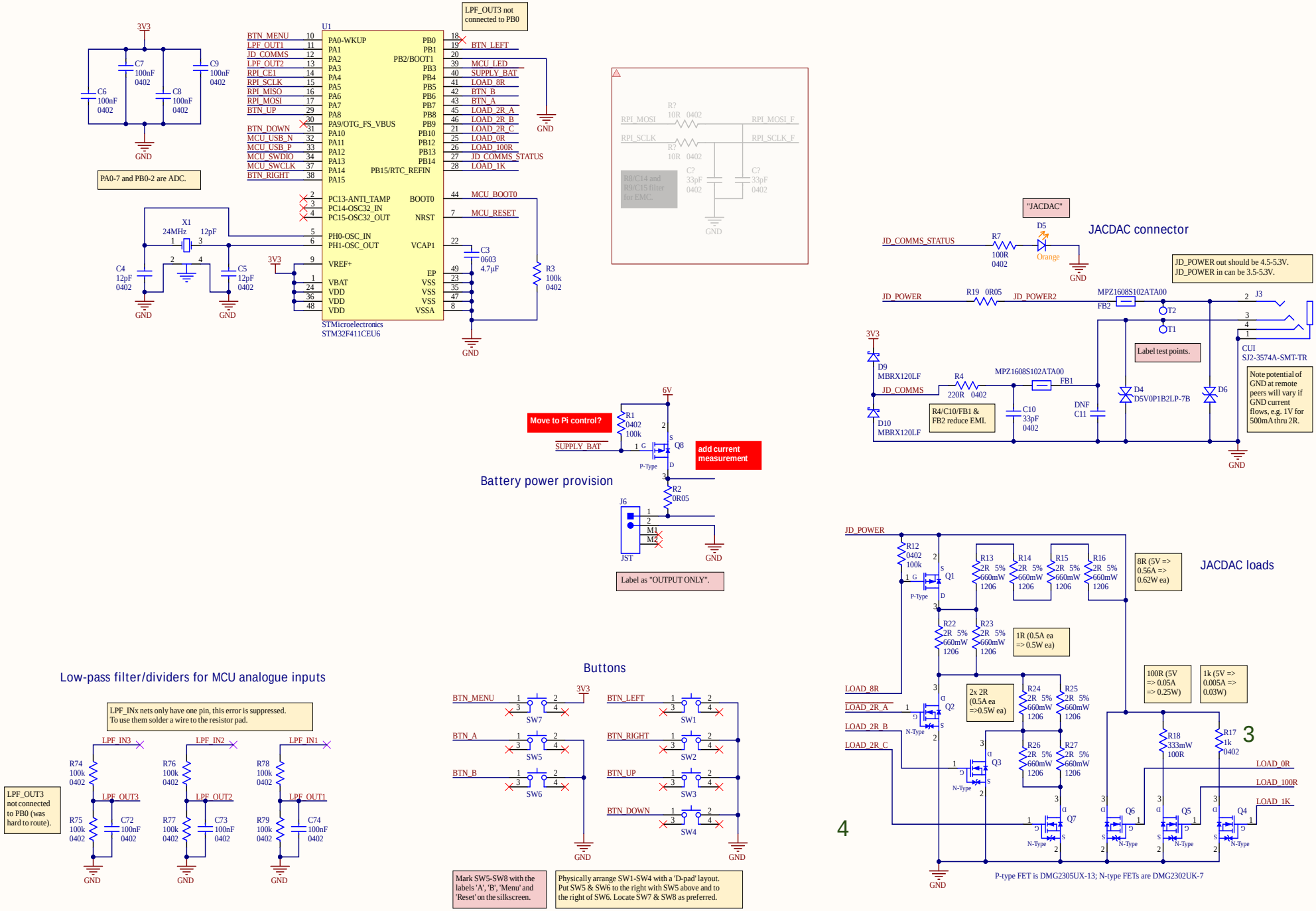
MCU
U1
STMicroelectronics
STM32F411CEU6
LPF_OUT3 not connected to PB0
PA0-7 and PB0-2 are ADC.
3V3
GND
C6 100nF 0402
C7 100nF 0402
C8 100nF 0402
C9 100nF 0402
X1 24MHz
C4 12pF 0402
C5 12pF 0402
C3 0603 4.7µF
R3 100k 0402
BTN_MENU
LPF_OUT1
JD_COMMS
LPF_OUT2
RPI_CE1
RPI_SCLK
RPI_MISO
RPI_MOSI
BTN_UP
BTN_DOWN
MCU_USB_N
MCU_USB_P
MCU_SWDIO
MCU_SWCLK
BTN_RIGHT
BTN_LEFT
MCU_LED
SUPPLY_BAT
LOAD_8R
BTN_B
BTN_A
LOAD_2R_A
LOAD_2R_B
LOAD_2R_C
LOAD_0R
LOAD_100R
JD_COMMS_STATUS
LOAD_1K
MCU_BOOT0
MCU_RESET
R8/C14 and R9/C15 filter for EMC.
RPI_MOSI_F
RPI_SCLK_F
JACDAC connector
"JACDAC"
JD_POWER
JD_POWER2
JD_COMMS
MPZ1608S102ATA00
FB1
FB2
D9 MBRX120LF
D10 MBRX120LF
D4 D5V0P1B2LP-7B
D6
J3
CUI SJ2-3574A-SMT-TR
Label test points.
JD_POWER out should be 4.5-5.3V. JD_POWER in can be 3.5-5.3V.
Note potential of GND at remote peers will vary if GND current flows, e.g. 1V for 500mA thru 2R.
R4/C10/FB1 & FB2 reduce EMI.
Battery power provision
Move to Pi control?
add current measurement
6V
SUPPLY_BAT
Q8
P-Type
R1 0402 100k
R2 0R05
J6
JST
Label as "OUTPUT ONLY".
JACDAC loads
8R (5V => 0.56A => 0.62W ea)
1R (0.5A ea => 0.5W ea)
2x 2R (0.5A ea =>0.5W ea)
100R (5V => 0.05A => 0.25W)
1k (5V => 0.005A => 0.03W)
N-Type
P-type FET is DMG2305UX-13; N-type FETs are DMG2302UK-7
Low-pass filter/dividers for MCU analogue inputs
LPF_INx nets only have one pin, this error is suppressed. To use them solder a wire to the resistor pad.
LPF_OUT3 not connected to PB0 (was hard to route).
LPF_IN3
LPF_IN2
LPF_IN1
LPF_OUT3
LPF_OUT2
LPF_OUT1
Buttons
BTN_MENU
BTN_A
BTN_B
BTN_LEFT
BTN_RIGHT
BTN_UP
BTN_DOWN
SW1
SW2
SW3
SW4
SW5
SW6
SW7
Mark SW5-SW8 with the labels 'A', 'B', 'Menu' and 'Reset' on the silkscreen.
Physically arrange SW1-SW4 with a 'D-pad' layout. Put SW5 & SW6 to the right with SW5 above and to the right of SW6. Locate SW7 & SW8 as preferred.
Microsoft
PROJECT DESCRIPTION
MakeCode Arcade R Pi testing HAT
SHEET DESCRIPTION
MCU and associated circuitry
SHEET FILENAME ArcadeTestHAT 05-1.1 MCU.SchDoc
PROJECT FILENAME ArcadeTestHAT 05-1.1.PrjPCB
PROJECT CODENAME ArcadeTestHAT
LICENCE TBC
LAST MODIFIED 3/29/2021
PAGE 2 OF 2
DRAWN BY Steve Hodges
REVISION 1.1
PCB ID 05-1.1