3V3 Regulator

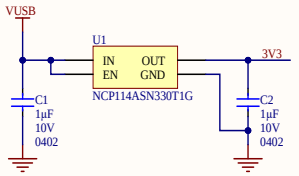

Status LEDs

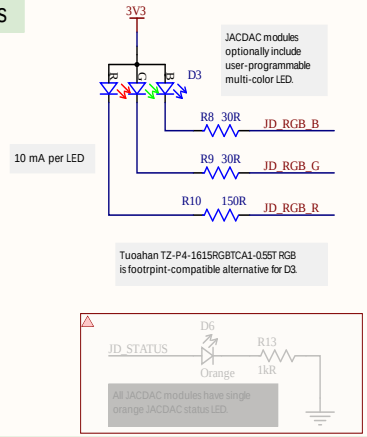

Power supply.

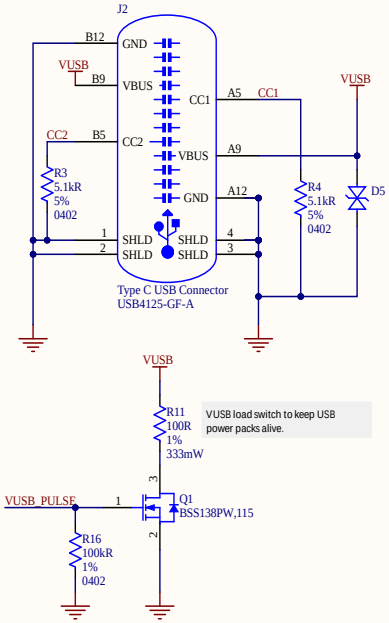

Current Limit switch

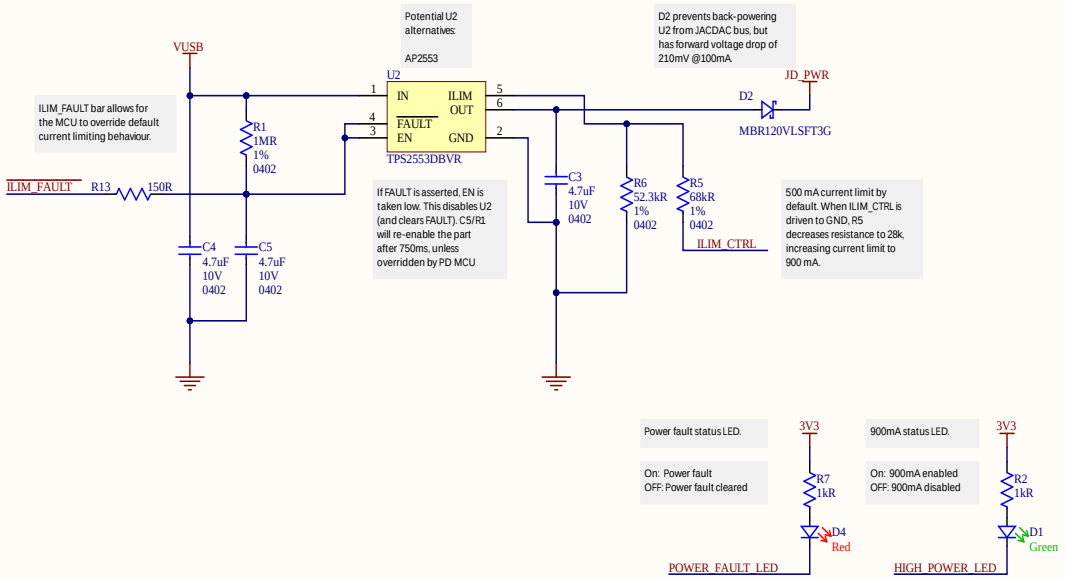

Power Delivery MCU

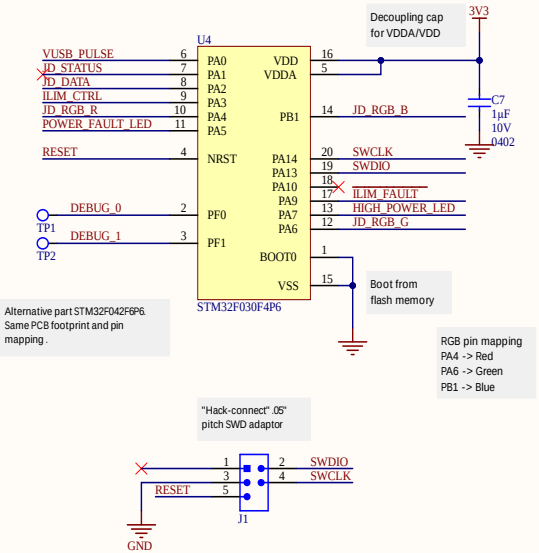

JACDAC interface

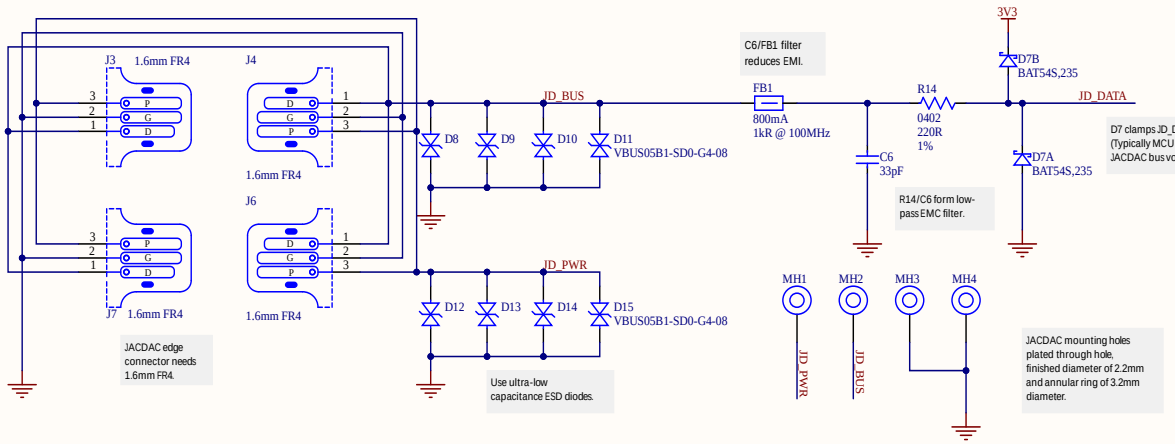

Silkscreen & layout notes

Block name

Design notes

This information is provided "as-is". You bear the risk of using it. Some information relates to pre-released specification which may change without notice. Microsoft makes no warranties, express or implied, with respect to the information provided here.

When this PDF is viewed with Adobe Reader, clicking on components shows part numbers and other details.

Microsoft	PROJECT DESCRIPTION Jacdac high power delivery module	SHEET DESCRIPTION complete design

SHEET FILENAME	JacdacHighPower 31.SchDoc	PROJECT FILENAME	JacdacHighPower 31.PrjPCB	PROJECT CODENAME	JacdacHighPower	LICENCE	Attribution 4.0 International (CC BY 4.0)	LAST MODIFIED	4/26/2021	PAGE	1 OF 1	DRAWN BY	JD, SH & DG	REVISION	0.1	PCB ID	31-0.1