4 Spindles screwing machine

文件集

REV.	DATE	NAME	CHANGES
0	2020/6/29	USER	

stanley	risepower	REVISION 0
	CONTRACT : 20-603 / User data 1 / User data 2	SCHEME 01

SOLIDWORKS Electrical

Document realized with version : 2018.0.3.18

1-文件集

圖紙	功能	位置	校對	日期	創建人	說明	資料夾終點
01	=F1	+L1	0	2020/6/29	USER	首頁	
02	=F1	+L1	0	2020/6/29	USER	圖紙清單	
03	=F1	+L1	0	2020/6/29	USER	主迴路	
04	=F1	+L1	0	2020/6/29	USER	安全繼電器模組	
05	=F1	+L1	0	2020/7/13	USER	安全閘門電路	
06	=F1	+L4	0	2020/6/29	USER	鎖付起子迴路	
07	=F1	+L1	0	2020/6/29	USER	振筒+平送1	
08	=F1	+L1	0	2020/6/29	USER	控制電源迴路	
09	=F1	+L1	0	2020/6/29	USER	PLC OUTPUT0	
10	=F1	+L1	0	2020/7/13	USER	PLC OUTPUT1	
11	=F1	+L1	0	2020/7/13	USER	PLC OUTPUT2	
12	=F1	+L1	0	2020/8/4	USER	PLC OUTPUT3	
13	=F1	+L1	0	2020/6/29	USER	PLC INPUT0	
14	=F1	+L1	0	2020/7/13	USER	PLC INPUT1	
15	=F1	+L1	0	2020/7/13	USER	PLC INPUT2	
16	=F1	+L1	0	2020/7/13	USER	PLC INPUT3	

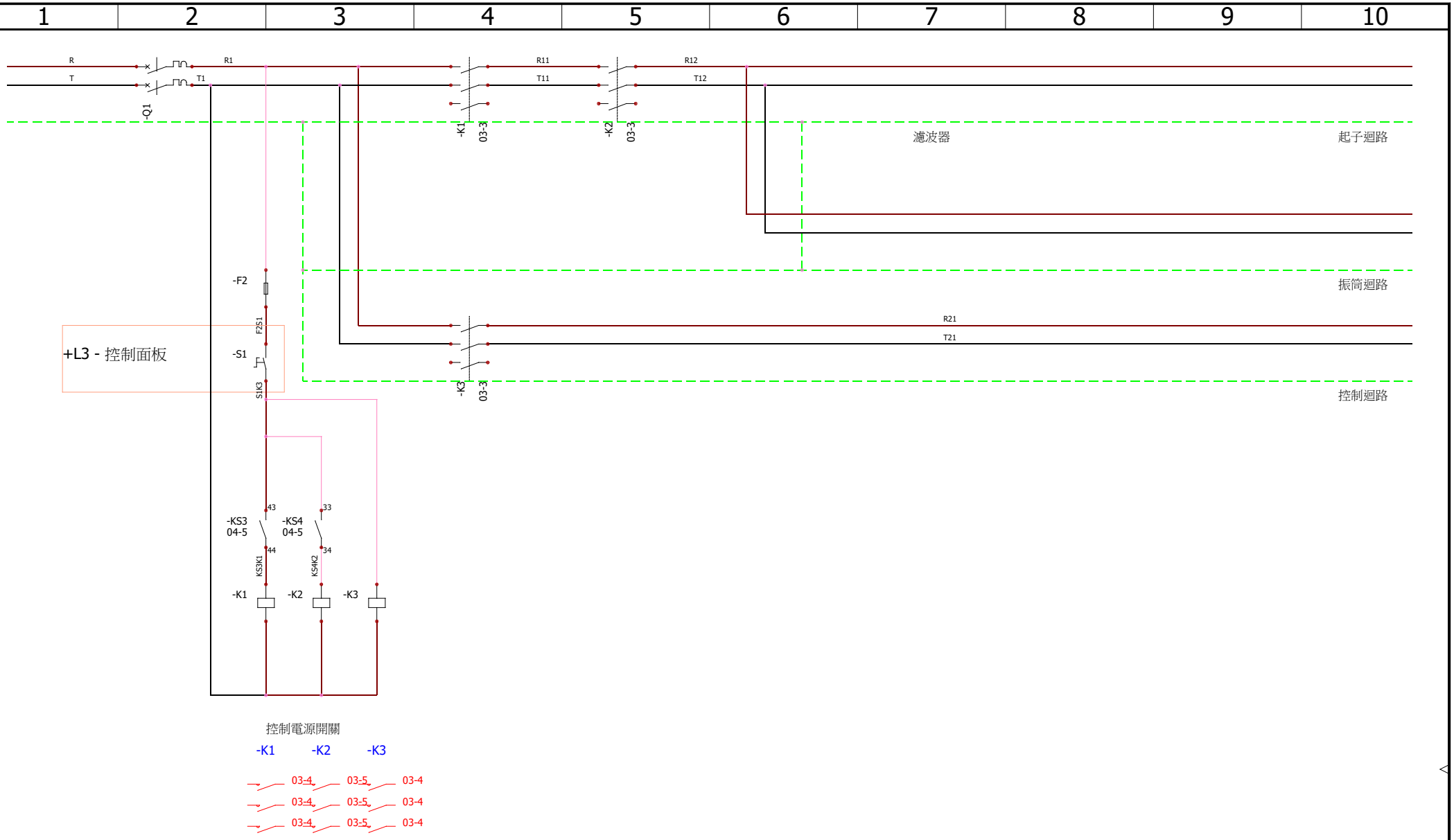

risepower	文件集			REVISION 0
		0	2020/6/29 USER	SCHEME 03
		REV.	DATE NAME	CHANGES
CONTRACT: 20-603	LOCATION: +L1 主電氣室	User data 1	User data 2	

SOLIDWORKS Electrical

Document realized with version : 2018.0.3.18

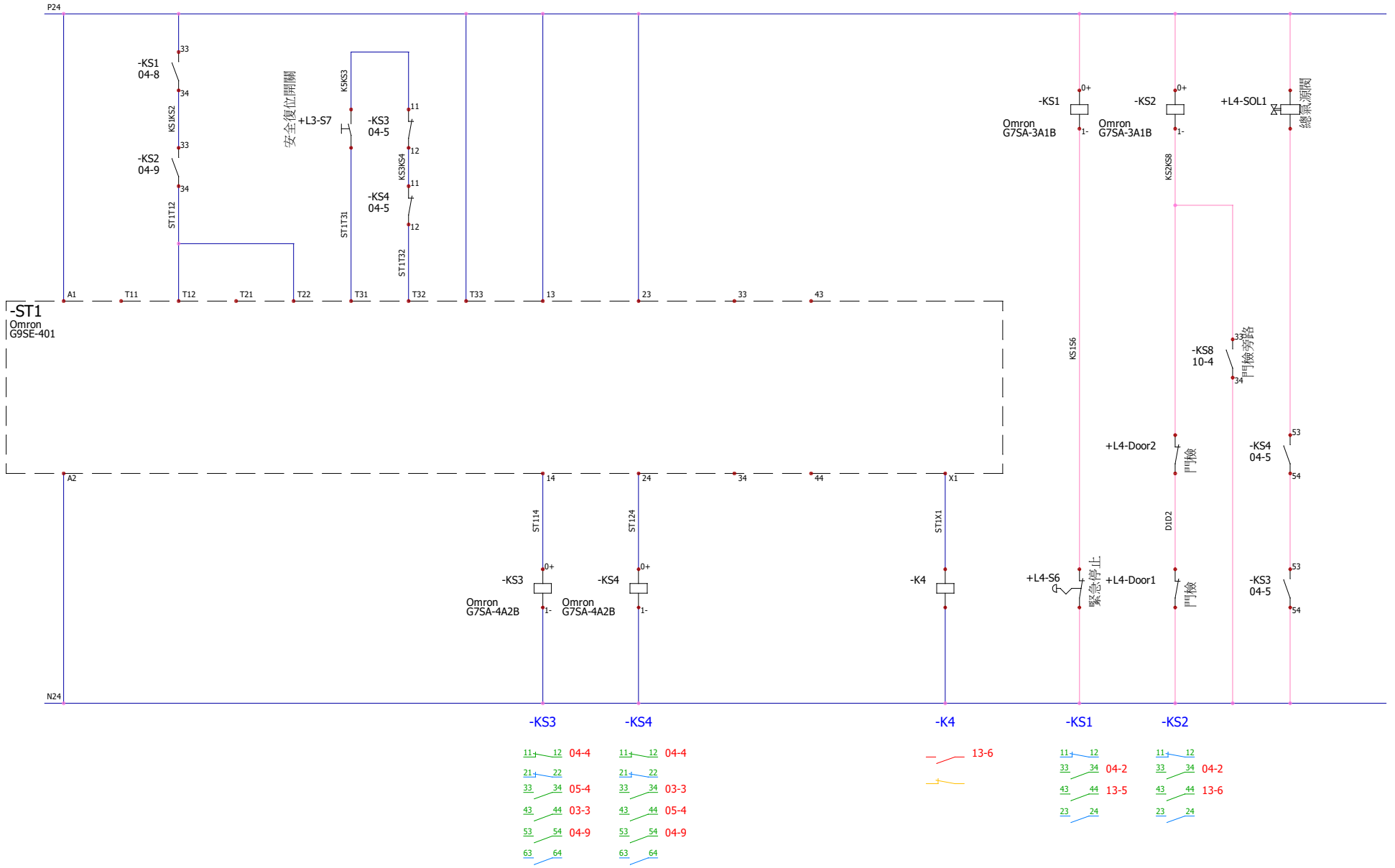

risepower	文件集			REVISION 0
				SCHEME 04
		0	2020/6/29	USER
		REV.	DATE	NAME CHANGES
CONTRACT: 20-603	LOCATION: +L1 主電氣室	User data 1		User data 2

SOLIDWORKS Electrical

Document realized with version : 2018.0.3.18

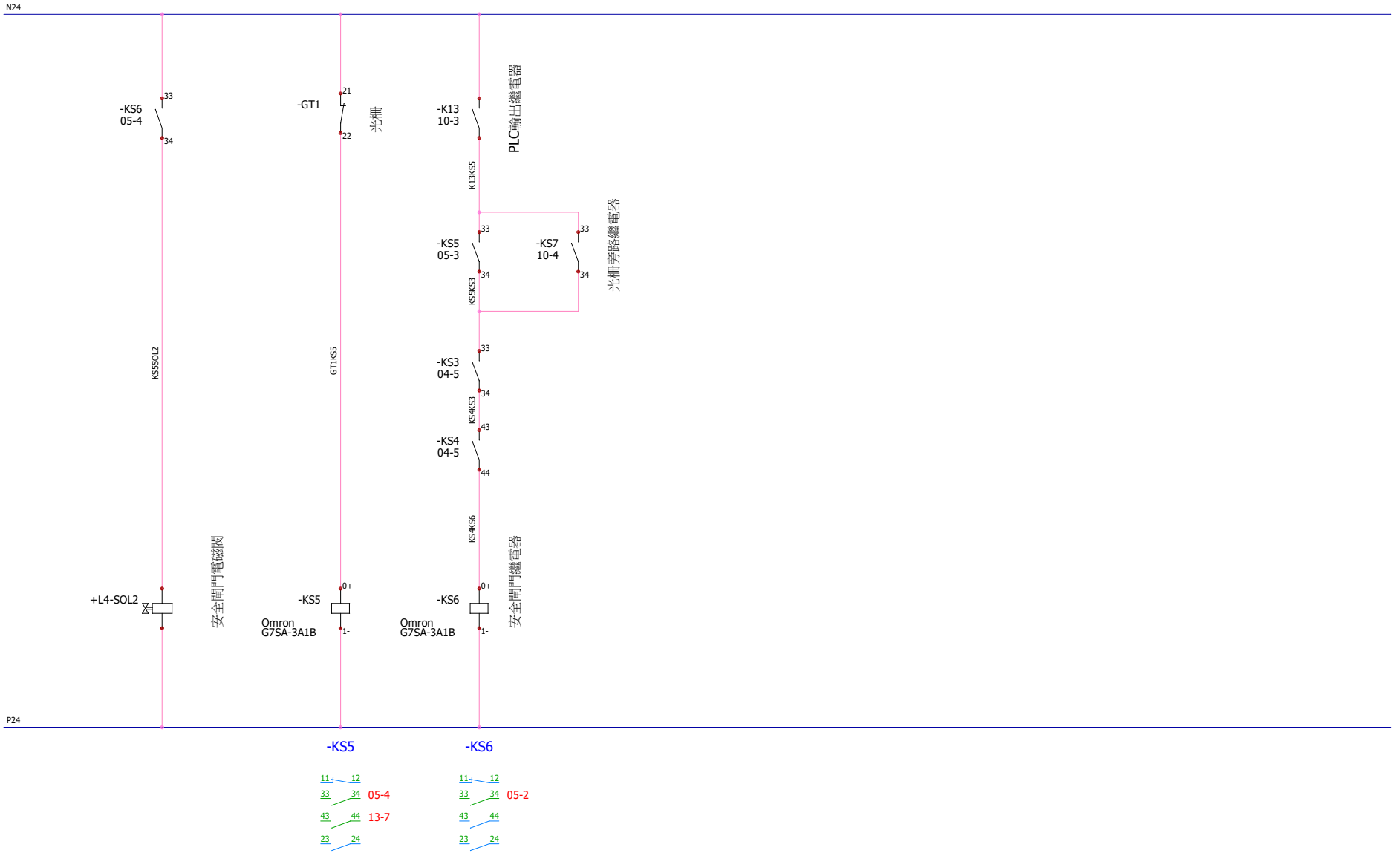

risepower	文件集			REVISION 0
		0	2020/7/13 USER	SCHEME 05
		REV.	DATE NAME	CHANGES
CONTRACT: 20-603	LOCATION: +L1 主電氣室	User data 1		User data 2

SOLIDWORKS Electrical

Document realized with version : 2018.0.3.18

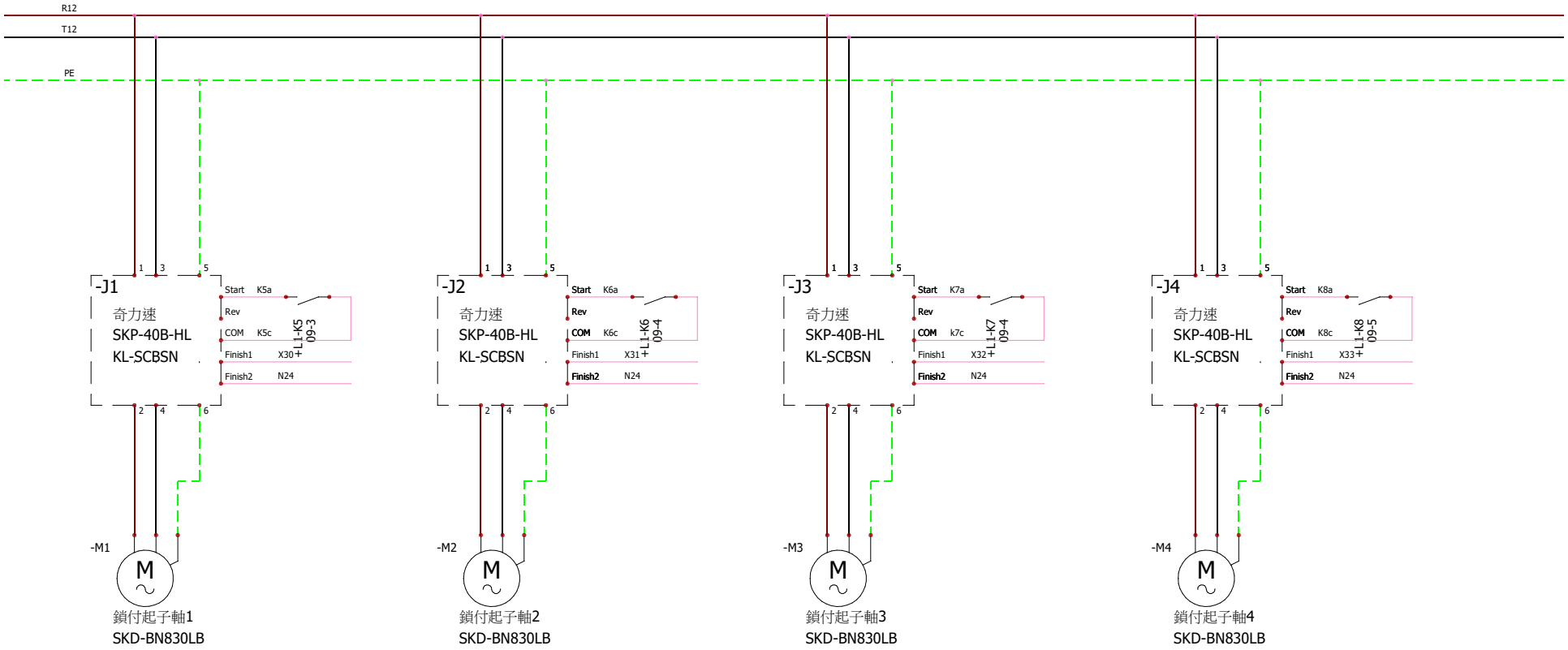

1	2	3	4	5	6	7	8	9	10

risepower

文件集

CONTRACT: 20-603

LOCATION: +L4 機構

REV.	DATE	NAME	CHANGES
0	2020/6/29	USER	

User data 1

User data 2

REVISION 0

SCHEME 06

SOLIDWORKS Electrical

Document realized with version : 2018.0.3.18

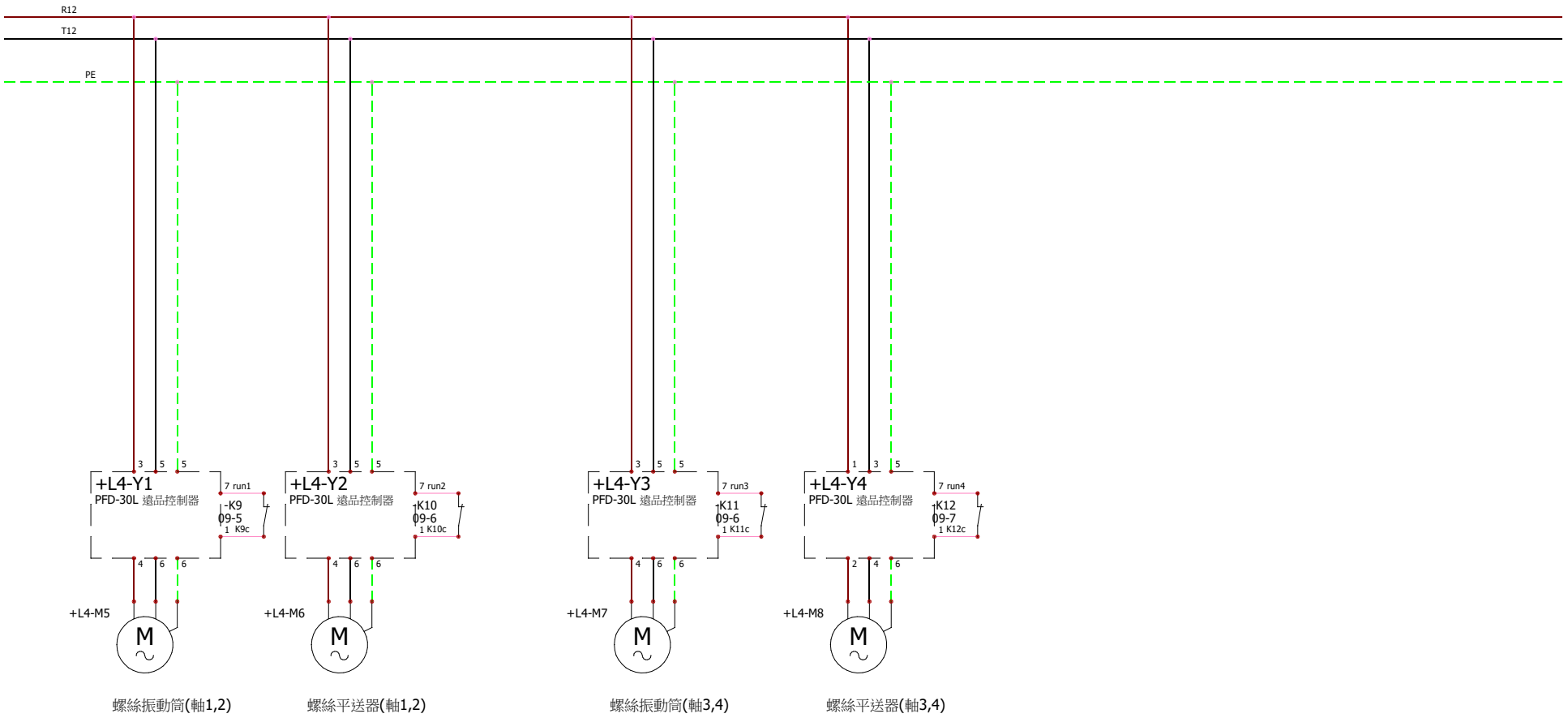

1	2	3	4	5	6	7	8	9	10

risepower

文件集

CONTRACT: 20-603

LOCATION: +L1 主電氣室

REV.	DATE	NAME	CHANGES
0	2020/6/29	USER	

User data 1

User data 2

REVISION 0

SCHEME 07

SOLIDWORKS Electrical

Document realized with version : 2018.0.3.18

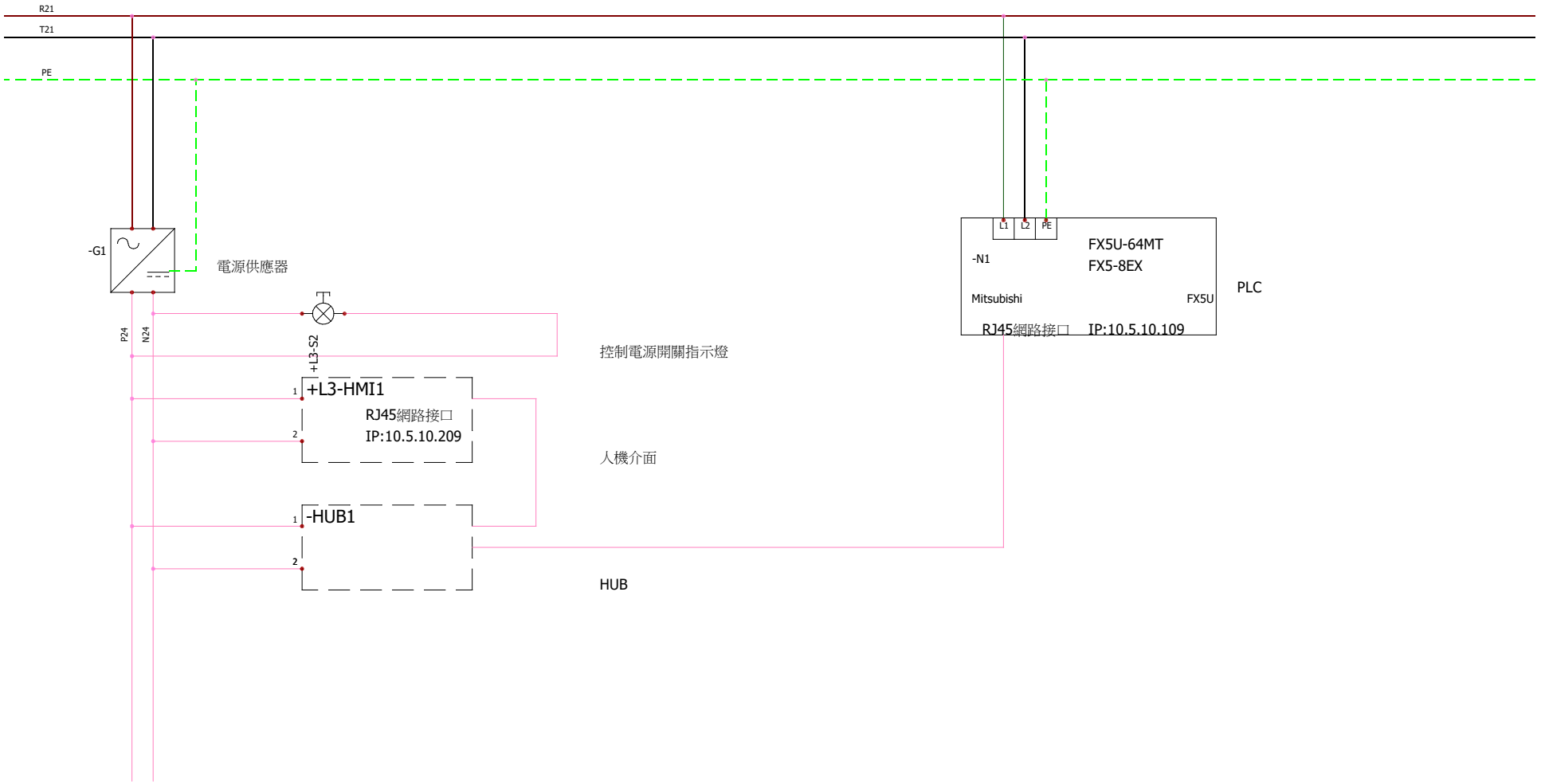

risepower	文件集			REVISION 0
		0	2020/6/29	USER
		REV.	DATE	NAME CHANGES
CONTRACT: 20-603	LOCATION: +L1 主電氣室	User data 1	User data 2	SCHEME 08

SOLIDWORKS Electrical

Document realized with version : 2018.0.3.18

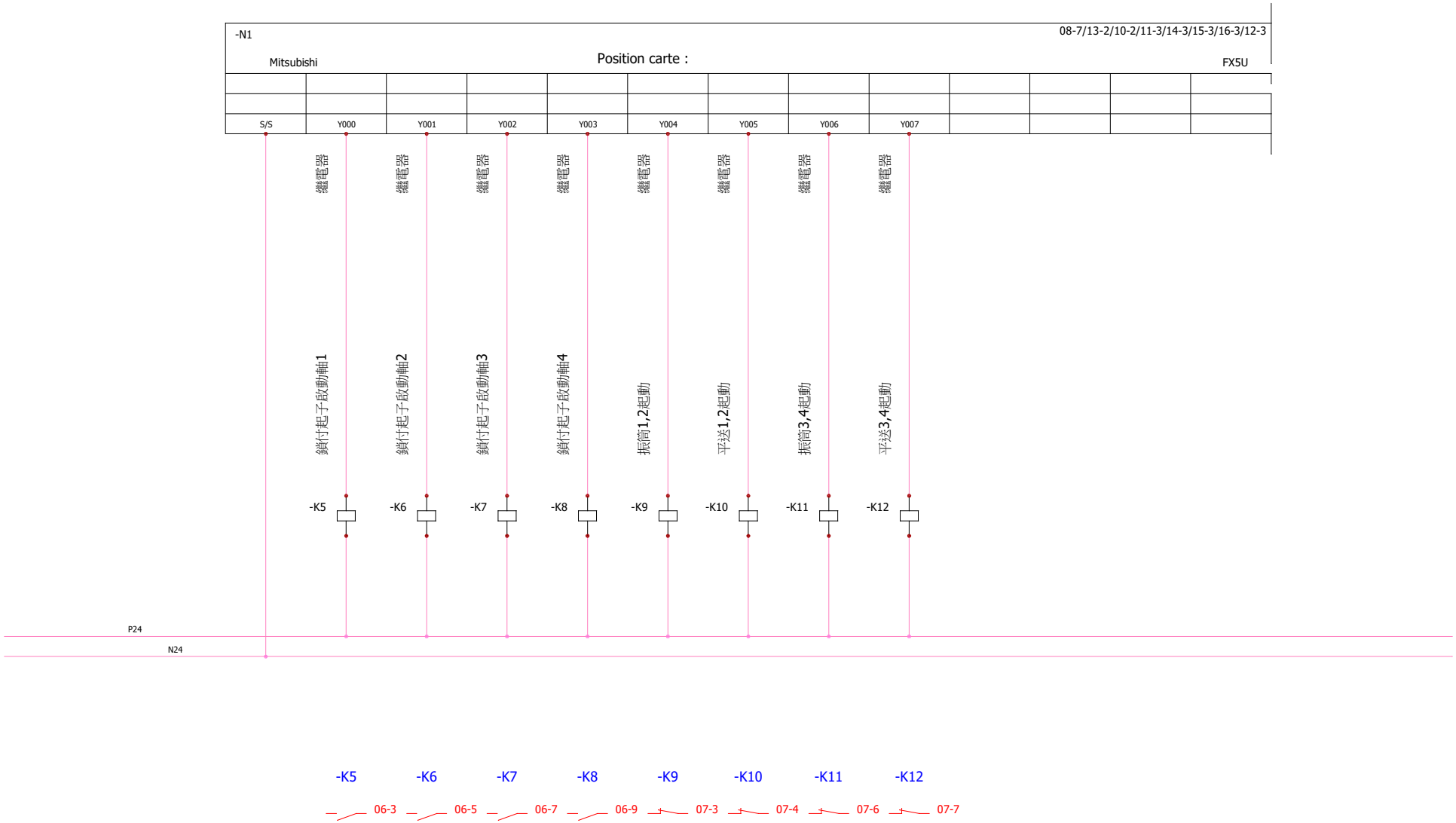

risepower	文件集				REVISION 0
		0	2020/6/29	USER	SCHEME 09
		REV.	DATE	NAME	CHANGES
CONTRACT: 20-603	LOCATION: +L1 主電氣室	User data 1		User data 2	

SOLIDWORKS Electrical

Document realized with version : 2018.0.3.18

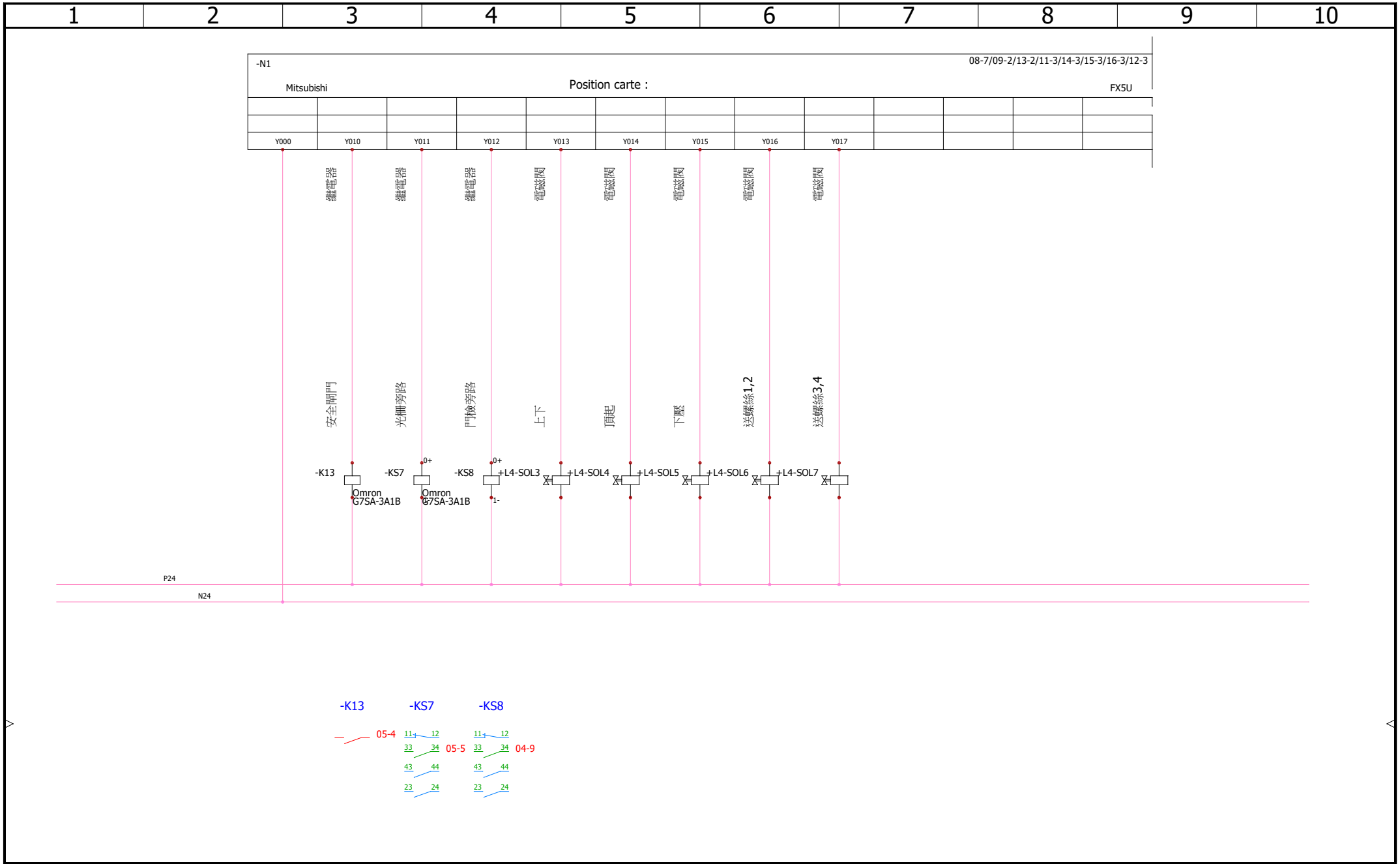

SOLIDWORKS Electrical

risepower	文件集					REVISION 0
		0	2020/7/13	USER		
		REV.	DATE	NAME	CHANGES	SCHEME 10
CONTRACT: 20-603	LOCATION: +L1 主電氣室	User data 1			User data 2	

Document realized with version : 2018.0.3.18

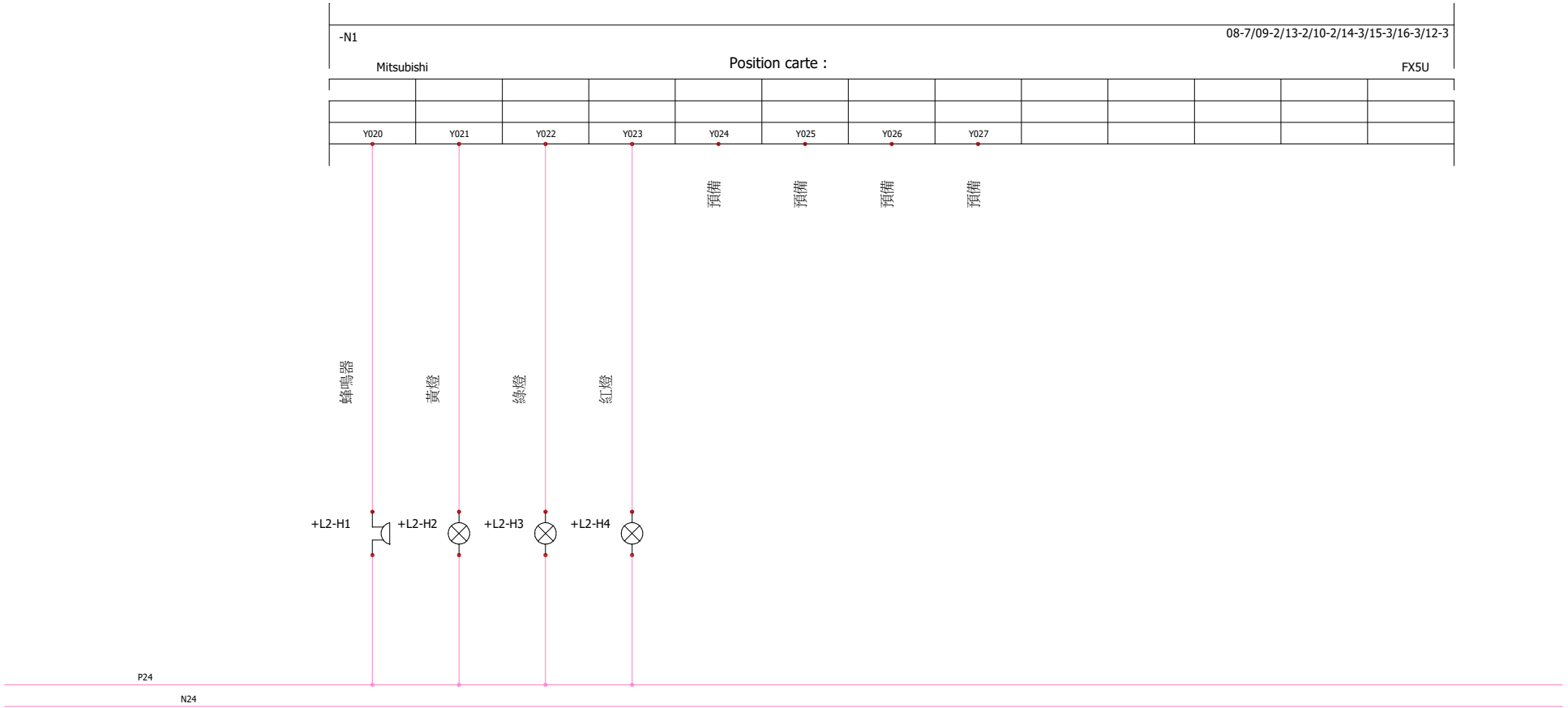

risepower	文件集		REVISION 0
CONTRACT: 20-603	LOCATION: +L1 主電氣室	0 / 2020/7/13 / USER / CHANGES	SCHEME 11
		User data 1	User data 2

SOLIDWORKS Electrical

Document realized with version : 2018.0.3.18

-N1

08-7/09-2/13-2/10-2/11-3/14-3/15-3/16-3

Mitsubishi

Position carte :

FX5U

Y030	Y031	Y032	Y033	Y034	Y035	Y036	Y037
預備	預備	預備	預備	預備	預備	預備	預備

P24

N24

risepower

文件集

CONTRACT: 20-603

LOCATION: +L1 主電氣室

REV.	DATE	NAME	CHANGES
0	2020/8/4	USER	

User data 1

User data 2

REVISION 0

SCHEME 12

SOLIDWORKS Electrical

Document realized with version : 2018.0.3.18

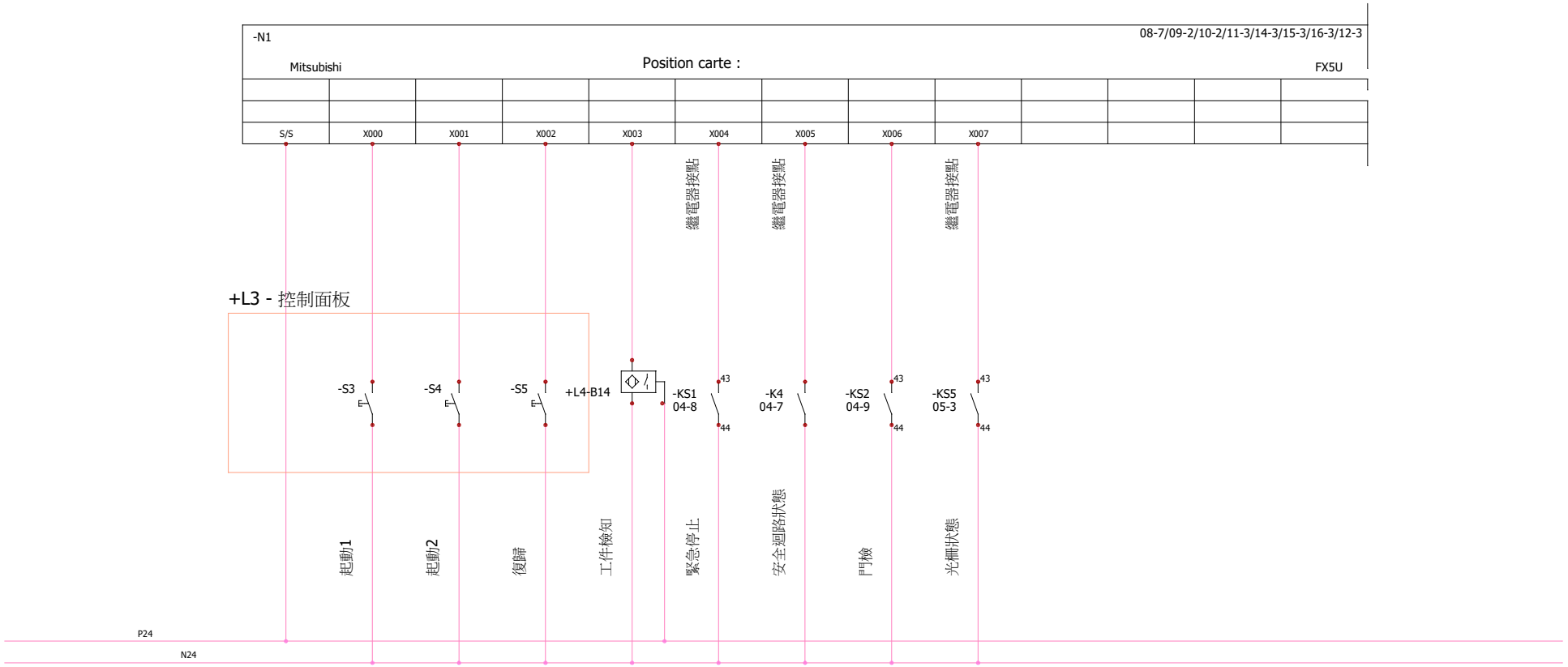

risepower	文件集			REVISION 0
		0	2020/6/29 USER	SCHEME 13
		REV.	DATE NAME	CHANGES
CONTRACT: 20-603	LOCATION: +L1 主電氣室	User data 1		User data 2

SOLIDWORKS Electrical

Document realized with version : 2018.0.3.18

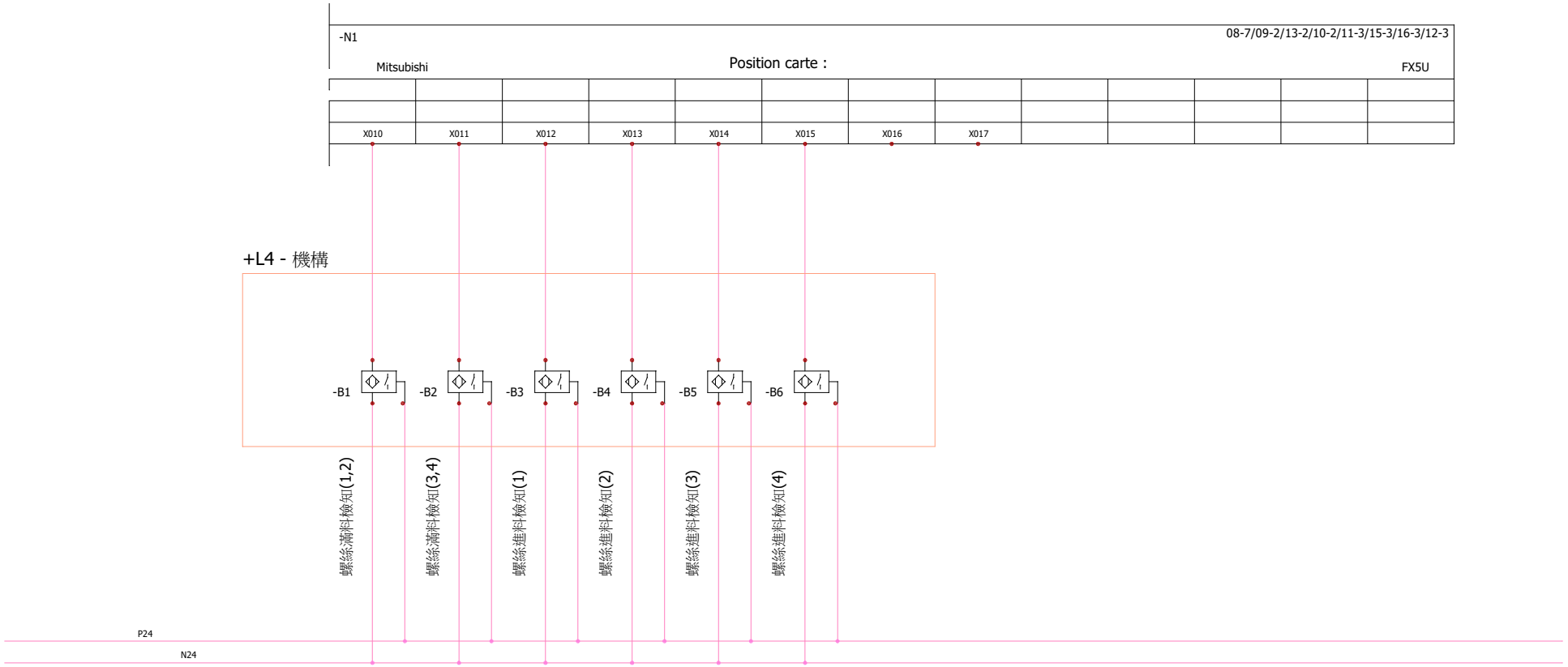

risepower	文件集				REVISION 0
		0	2020/7/13	USER	SCHEME 14
		REV.	DATE	NAME	CHANGES
CONTRACT: 20-603	LOCATION: +L1 主電氣室	User data 1		User data 2	

SOLIDWORKS Electrical

Document realized with version : 2018.0.3.18

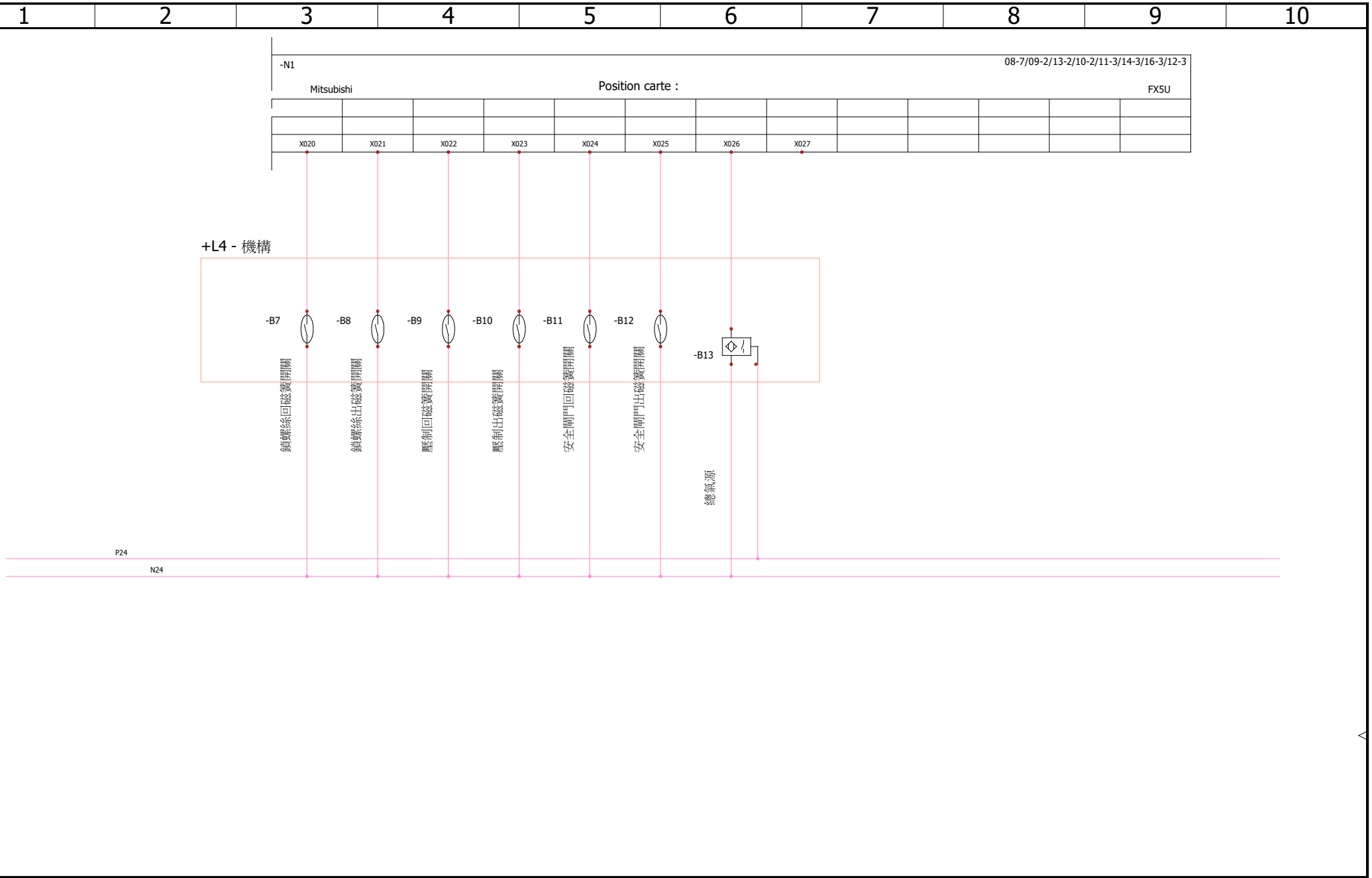

1	2	3	4	5	6	7	8	9	10

risepower

文件集

CONTRACT: 20-603

LOCATION: +L1 主電氣室

REV.	DATE	NAME	CHANGES
0	2020/7/13	USER	

User data 1

User data 2

REVISION 0

SCHEME 15

SOLIDWORKS Electrical

Document realized with version : 2018.0.3.18

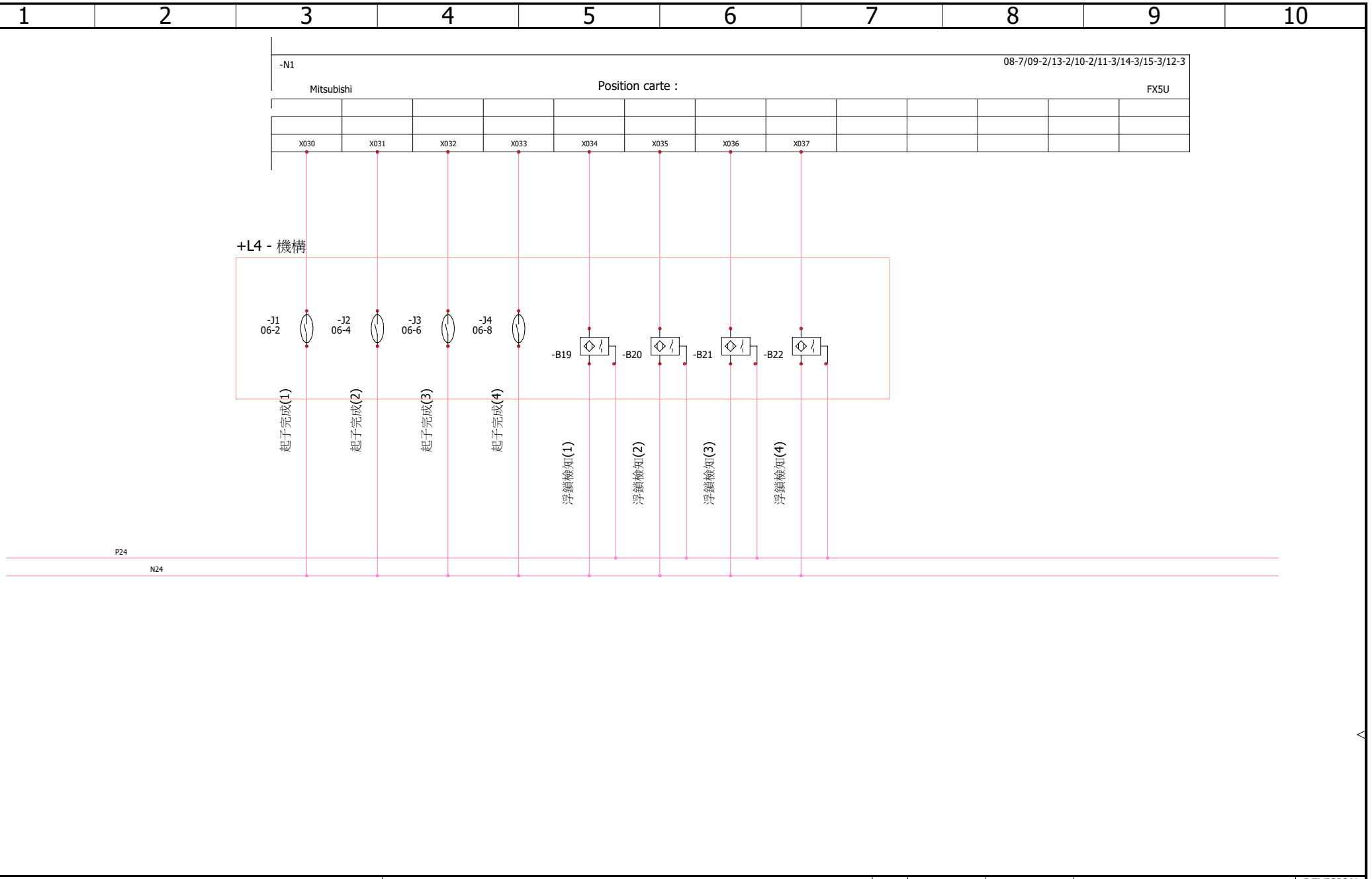

risepower	文件集				REVISION 0
		0	2020/7/13	USER	SCHEME 16
		REV.	DATE	NAME	CHANGES
CONTRACT: 20-603	LOCATION: +L1 主電氣室	User data 1		User data 2	

SOLIDWORKS Electrical

Document realized with version : 2018.0.3.18