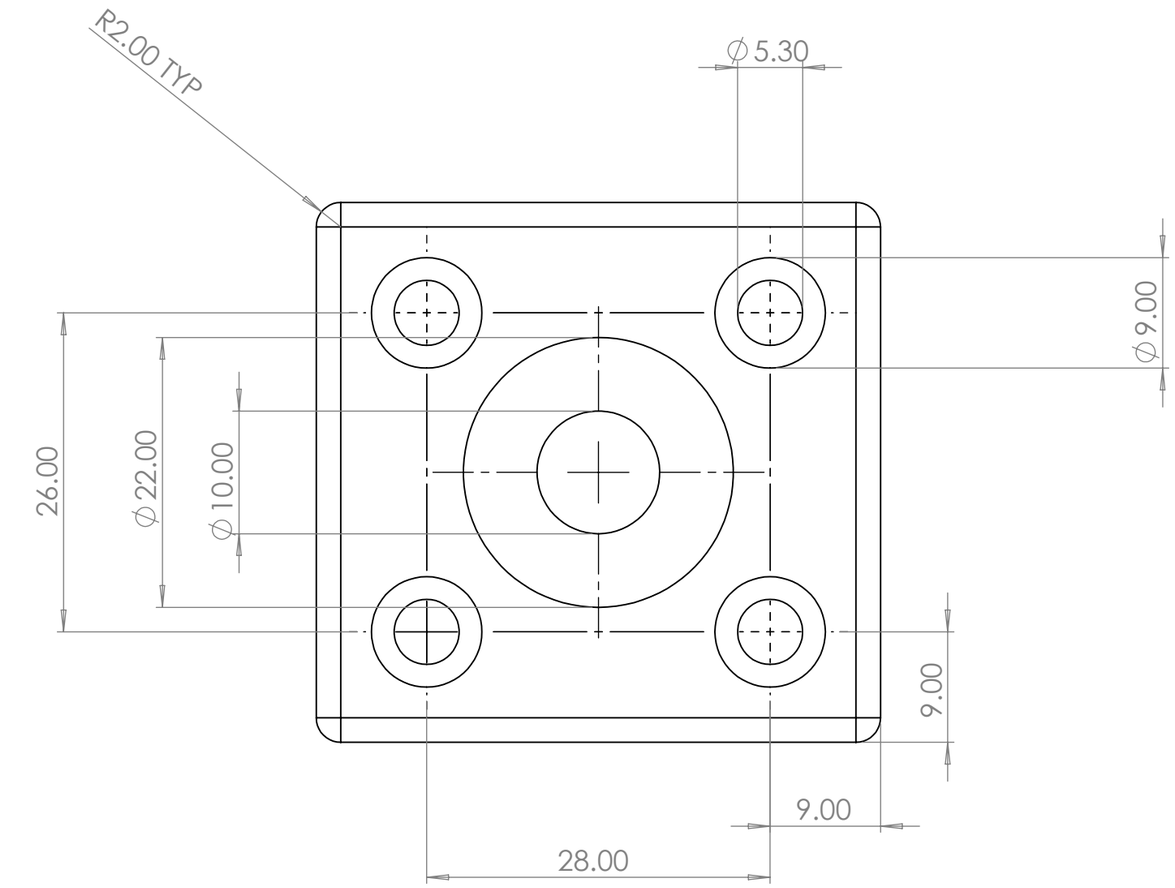

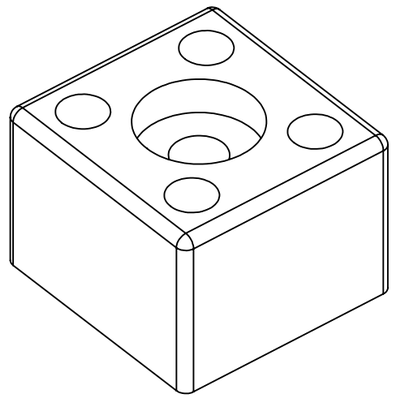

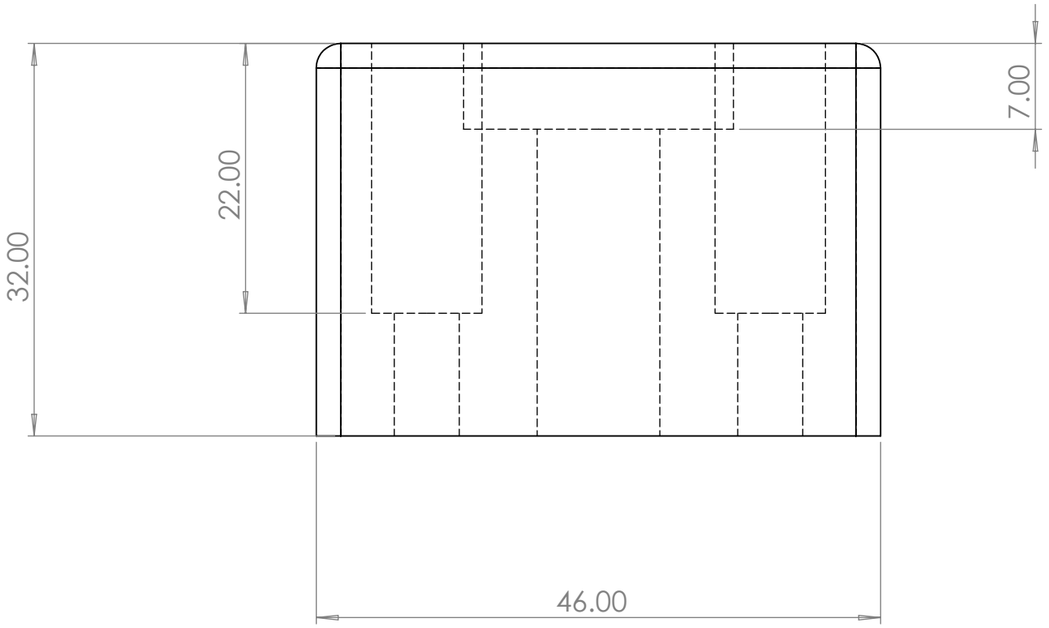

NOTES:
All dimensions in mm
All tolerances ± 0.2mm
Unless otherwise stated

TITLE:

SBR12UU Mount

MATERIALS:
PLA

MONASH UNIVERSITY DEPARTMENT OF MECHANICAL ENGINEERING

DRN BY: DW

DATE: 24/05/2023

A3

SCALE: 2:1

DWG NO. 4.1.5

SOLIDWORKS Educational Product. For Instructional Use Only.