Heat Transfer Maximization at a Minimal Transportation Cost

Team 21: Miguel Bigott, Jack Decker, Aaron Gunn, Lauren Montigue,
Andrew Sheffield, Albert Wang

1. System Description

In electronic devices, especially those that require large processing power over long amounts of time, a great amount of heat can build up within. Without effective cooling systems, this heat can slow operating speeds, produce hazards, and even break the devices in which it is occurring. This report attempts to optimize the design of a hybrid heat exchanger device that pulls heat away from an AMD SP3 Server CPU, which generates between 200W and 300W and typically operates at around 60°C (333.15K). Upon determining design variables, parameters, and constraints, a number of optimization techniques were utilized to maximize the performance of the system and the performance of each of the three subsystems within.

The system flow diagram for our system is shown in Figure 1 below. It consists of our three subsystems - related to optimizing fin geometry for sufficient convective heat transfer to the ambient surroundings, optimizing fluid flow through pipes to ensure that heat transfer is being maximized from a cost perspective, and optimizing transport costs to ensure profitability.

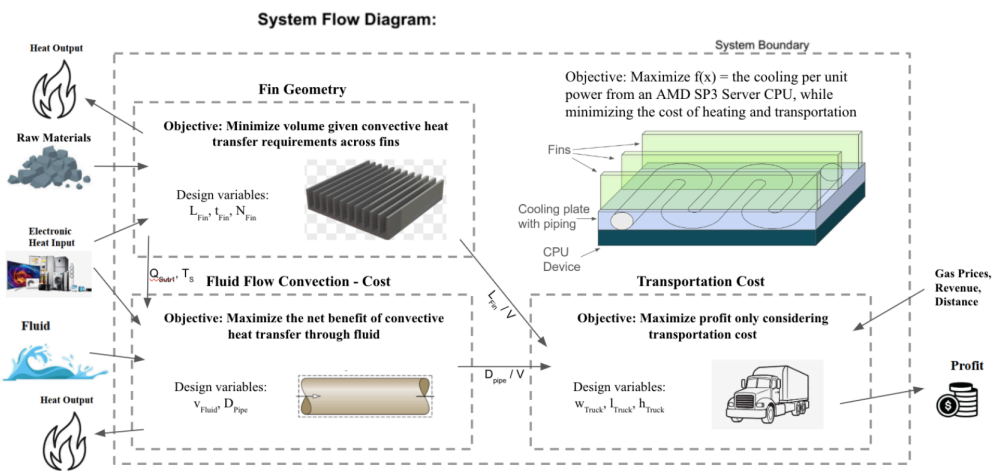

Figure 1: System Flow Diagram

As pictured, some of the inputs for our system include raw materials for the design of our device, heat input from the CPU, fluid for the second subsystem, and gas prices which all exist outside of the system boundary. The primary outputs are heat and profit. Between subsystems, some variables are loosely coupled - such as T_S, the initial temperature of the CPU (used in subsystem 1 and 2), and Q_{Sub1}, which is used to influence the degree to which subsystem 2 needs to be able to transfer heat away from the CPU on its own. Other coupling is present in finding the volume of the product for the transportation subsystem - the optimal fin length and pipe diameter are outputs for subsystem 1 and 2 respectively, and are both used to help calculate this value. The boundary of the system encompasses the heat exchanger, the CPU, and the costs associated with transporting it between two facilities. Subsystem one and two are focused on the design of the heat exchanger, while subsystem three uses this design to assist in finding costs. The three subsystems have been jointly optimized to ensure profit can be maximized given other constraints that will be discussed within the report.

2. Optimization Model

This project formulates a system-level optimization problem aimed at maximizing truck profit while ensuring adequate heat transfer performance through coupled subsystem design. The problem is structured around shared design variables that link three subsystems: fin geometry, fluid convection, and transportation. These variables are coordinated to minimize the deviation between subsystem performance and their assigned targets and are presented in the table below.

Definition of the Design Variables

Table 1. Target, Response, and Design Variables Corresponding to Each Subsystem.

	Target	Response	Design Variables	Local or System Level?
Transportation System SS	$Profit_{target}$	$Profit_s$	$L_{fin,s}$, $D_{pipe,s}$	System
Fin Geometry SS	$L_{fin,s}$	L_{fin}*	L_{Fin}, N_{Fin}, t_{Fin}	Local
Fluid Convection SS	$D_{pipe,s}$	D_{pipe}*	v_{Fluid}, D_{pipe}	Local

All design variables are treated as continuous variables in our simulation, except for N_{Fin}, which is an integer.

Definition of the Relevant Parameters

Cost of Gas,	$Cost_{gas}$ = \$1,094.30
Cost of Wear and Tear,	$Cost_{Wear\&Tear}$ = \$1,403.90
Cost of Carbon Emissions,	$Cost_{carbon_emissions}$ = \$4.95
Lower Subsystem Weights,	$w_{geom} = w_{conv} = 1$
Revenue per Unit Heat Sink,	R_{unit} = \$15.50/unit
Volume of the Truck,	$V_{truck} = 40.78\ m^3$
Heat Sink Length,	$HS_{length} = 0.076$ m
Heat Sink Width,	$HS_{width} = 0.056$ m
CPU Height,	$CPU_{height} = 0.002$ m

Definition of the Constraints

The first constraint is developed via a surrogate model that relates $L_{fin,s}$ and $D_{pipe,s}$ to a $Q_{allowable}$ value that we deemed to be 250W. This is the minimal acceptable heat transfer throughout the entire system, based on the type of CPU we are designing for.

$$Q_{allowable} = 250 \leq 117.3 + 4421 \cdot L_{fin,s} + 4261 \cdot D_{pipe,s}$$

The second constraint is derived from the profit equation from the transportation subsystem that takes in three parameters - the cost of gas, the cost of wear and tear, and the cost of carbon emissions. There is one term that is based on the system level design variables which is revenue. A five percent reduction in importance is placed onto the cost of wear and tear due to the assumption that an abundance of trucks are in the fleet of our shipping company and a five

percent emphasis is placed on the cost of carbon emissions due to the assumption that the Vice President of our company really wants to tackle carbon emissions. It is important to remember that this is the profit per truck.

$$Profit_s = Revenue(L_{fin,s},D_{pipe,s}) - Cost_{gas} - Cost_{Wear\&Tear}^{0.95} - Cost_{carbon_emissions}^{1.05}$$

A break down for the equation of revenue can be seen below where everything besides D_{pipe} and L_{fin} are treated as parameters of the system:

$$Revenue = R_{unit} \cdot V_{truck}/(HS_{length} \cdot HS_{width} \cdot (CPU_{height}+D_{pipe,s}+L_{fin,s}))$$

Side Constraints for Local Design Variables:
$0.004\ m < L_{fin} < 0.010\ m$
$1\ fin < N_{fin} < 25\ fins$
$0.001\ m < t_{fin} < 0.010\ m$
$0.0001\ m/s < v_{fluid} < 3\ m/s$
$0.004\ m < D_{pipe} < 0.010\ m$

Definition of the Objective Function
The system-level objective function minimizes the squared difference between targets and actual subsystem responses:

$$f = (Profit_{target} - Profit_s)^2 + w_{geom} \cdot (L_{fin,s}-L_{fin}*)^2 + w_{conv} \cdot (D_{pipe,s} - D_{pipe}^*)^2$$

This weighted-sum of squared-error terms represents our system-level optimization formulation, allowing for coordination across subsystems via the linking variables L_{Fin} and D_{Pipe}.

Negative Null Format
Minimize: $(Profit_{target} - Profit_s)^2 + w_{geom} \cdot (L_{fin,s}-L_{fin}*)^2 + w_{conv} \cdot (D_{pipe,s} - D_{pipe}^*)^2$

Subject To: $250 - (117.3 + 4421 \cdot L_{fin,s}+4261 \cdot D_{pipe,s}) \leq 0$

$Profit_s - (Revenue - Cost_{gas} - Cost_{Wear\&Tear}^{0.95} - Cost_{carbon_emissions}^{1.05}) = 0$

Theoretical Mathematical Format Equivalent Negative Null Format
Minimize: $f(x_{l1},x_{l2},y_1)$

Subject To: $h(x_{l1},x_{l2},y_1) \leq 0$

$y_1 = a_1(x_1)$

Discussion
The framework for this system level optimization differs from just a collection of subsystem level optimizations. The system level approach seeks to maximize profit while emphasizing the L_{pipe} and D_{pipe} allowable for the desired heat transferability via back propagation; however, the subsystems individually optimize L_{pipe} and D_{pipe} which are then given to the transportation

subsystem to produce an optimal profit. Prior, in the subsystem level optimization we conducted, L_{pipe} and D_{pipe} were not optimized together and were separate design variables and parameters.

Another feature of the system level optimization is the robustness to tune the importance of L_{fin} compared to D_{pipe} to match customer preferences for fin versus fluid convection. In the collection of subsystems, the transportation subsystem was seeking to decide on the optimal truck size based on size of heat sinks, but in the system optimization, truck size was a chosen parameter.
Finally, it's important to discuss the trade-offs introduced by our constraints and weighting scheme. The first constraint on $Q_{allowable}$ directly limits the optimization by requiring the system to meet a minimum heat transfer value. Physically, achieving this typically requires larger or more efficient components, which comes at the expense of profit - so there's a clear inverse relationship. The second constraint impacts profit directly by accounting for real-world costs such as gas, wear and tear, and even carbon emissions, ensuring a more realistic and constrained profit calculation. Lastly, the weighting scheme adds another trade-off: adjusting the weight of a subsystem can help improve profit, but often at the cost of reduced heat transfer performance, and vice versa. Keeping these trade-offs in mind was crucial in order for us to produce the best model possible.

3. Mathematical Modelling

A major step in deciding on our system level heat transfer constraint was surrogate modeling via multi-linear regression. To understand how we populated our training data from this, a visual of our system with an equivalent thermal circuit are provided below.

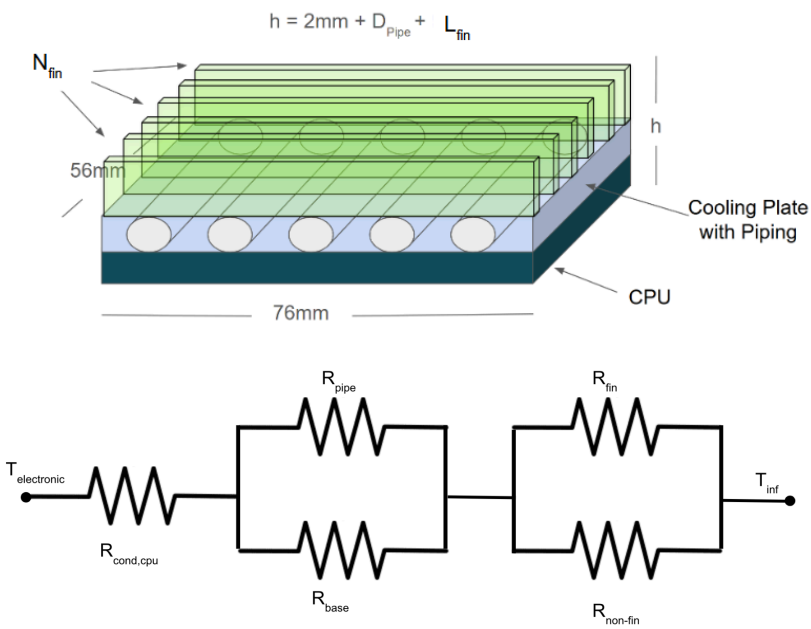

Figure 2: Heat Sink Thermal Circuit visual with labeled parameters and constraints (2a) alongside a corresponding Heat Sink 3D Schematic (2b)

$R_{cond,cpu}$ and R_{base} were derived using Fourier's Law of Heat Conduction, and R_{pipe} was derived from Newton's Cooling Law. R_{fin} and $R_{non\text{-}fin}$ represent the conduction through the fins and convection into air from the base respectively. Using an electronic temperature, $T_{electronic}$, of 60ºC and an ambient air temperature, T_{inf}, of 21ºC along with a determined $Q_{allowable_max}$ of 250W, we

can use the temperature differences and various $Q_{allowable}$'s to determine what the resistance in series values should be. It is important to note that R_{pipe} and R_{fin} are influenced by the design variables D_{pipe} and L_{fin}.

$$R_{series} = R_{cond,cpu} + (R_{pipe}^{-1}(D_{pipe})+R_{base}^{-1})^{-1} + (R_{fin}^{-1}(L_{fin})+R_{non\text{-}fin}^{-1})^{-1}$$

Using this logic, we were able to determine a sample of eleven data pairings of L_{fin} and D_{pipe} which correspond to various values of $Q_{allowable}$ that are displayed in the following table. The first seven rows will be used in training a multi-linear regression model and the last four rows will be used in validating the model.

Table 2. Generated $Q_{allowable}$ based on L_{fin} and D_{pipe} for training and validating a predictive model.

L_{fin}	D_{pipe}	$Q_{allowable}$
0.004 [m]	0.005 [m]	154.1 W
0.005 [m]	0.006 [m]	175.3 W
0.006 [m]	0.010 [m]	180.4 W
0.007 [m]	0.004 [m]	161.4 W
0.008 [m]	0.003 [m]	163.3 W
0.009 [m]	0.009 [m]	197.3 W
0.010 [m]	0.007 [m]	193.5 W
0.007 [m]	0.007 [m]	175.6 W
0.005 [m]	0.010 [m]	178.3 W
0.010 [m]	0.005 [m]	185.3 W
0.004 [m]	0.004 [m]	142.4 W

Using the training data pairings, a multi linear regression equation was formed based on the equation below and with the help of the python library sci-kit-learn.

$$y \approx \beta_0 + \beta_1 x_1 + \beta_2 x_2$$

$$Q_{allowable} \approx 117.3 + 4421L_{fin}+4261D_{pipe}$$

To determine the accuracy of our model, we determined the mean absolute error (MAE) and the mean of $Q_{allowable}$ from the validation data to act as our $\bar{y}_{val}$ which lead to an accuracy of 97.31%,

which makes sense since all of this data was drawn from the same heat transfer theory.

$$\text{Accuracy (\%)} = 100 - ((\text{MAE}/\bar{y}_{val})\cdot 100)$$

Our system-level constraint was then deemed to be the following based on our max heat transfer of 250 W.

$$Q_{allowable_max} = 250 \leq 117.3 + 4421L_{fin} + 4261D_{pipe}$$

4. Optimization Method

The Analytical Target Cascading (ATC) Framework was selected due to its ability to handle unlinked systems via a decomposition tree through nodes and edges. The fin geometry and fluid convection subsystems act as nodes that flow up into the transportation subsystem node via edges to eventually obtain a target profit. Converting from our objective function to the ATC formula was fairly simple using this framework. The final ATC algorithm is seen here:

$$f = \varphi(t_{transportation} - r_{transportation}) + w_{geom}\varphi(t_{geom} - r_{geom}^*) + w_{conv}\varphi(t_{conv} - r_{conv}^*)$$

Breaking down the three terms in this equation, the transportation segment links directly to the transportation segment of the original equation:

$$\varphi(t_{transportation} - r_{transportation}) = (\text{Profit}_{target} - \text{Profit}_s)^2$$

Similarly, the fin geometry and fluid convection portions are connected as follows, excluding the weights:

$$\varphi(t_{geom} - r_{geom}^*) = (L_{fin,s} - L_{fin}^*)^2$$

$$\varphi(t_{conv} - r_{conv}^*) = (D_{pipe,s} - D_{pipe}^*)^2$$

The system is created in such a way that seeks to primarily optimize profit, especially given the ability to tune the weights on the two lower level subsystems up and down. Previous iteration results are used to develop new local optimums at the subsystem level, and this hierarchical framework allows the profit to be prioritized.

We elected to use Matlab to complete this ATC optimization. The target profit was set to a very large number. We ran the simulation many times with previous iterations used as initial conditions for successive runs, eventually leading our code to converge on optimal values. Matlab was selected due to both its ability & simplicity in being able to handle this sort of code and our familiarity with using it in prior optimization problems. The workflow of this method is shown in Figure 3 on the following page.

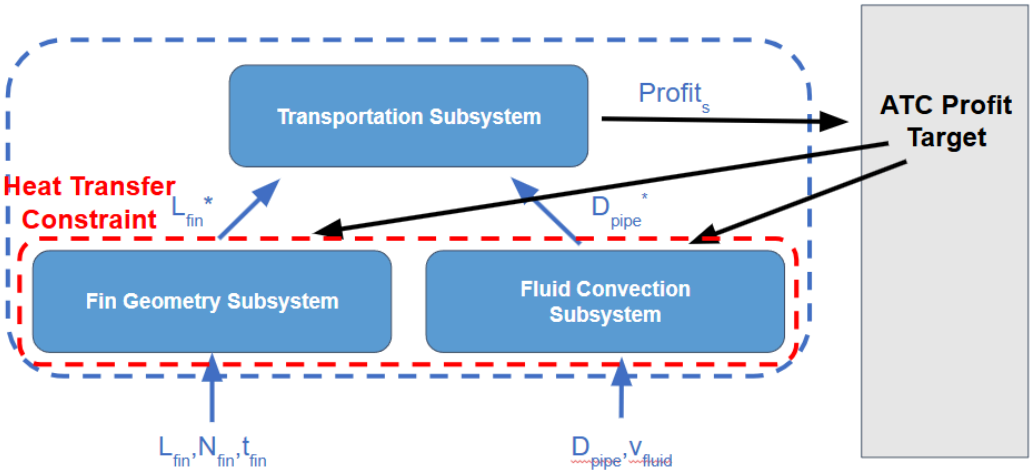

Figure 3: Schematic of optimization workflow.

An additional scheme we used to make our solver more reliable was running a quick cost-function analysis. The contour plot in Figure 4 below shows the log of our objective function across different flow velocities and pipe-diameter settings. From the plot's valleys and ridges, we chose good starting points for our ATC runs and spotted areas where small changes would cause big jumps in the objective. This helped us adjust our initial guesses and visualize pipe diameter insensitivity so that the ATC algorithm converged more smoothly.

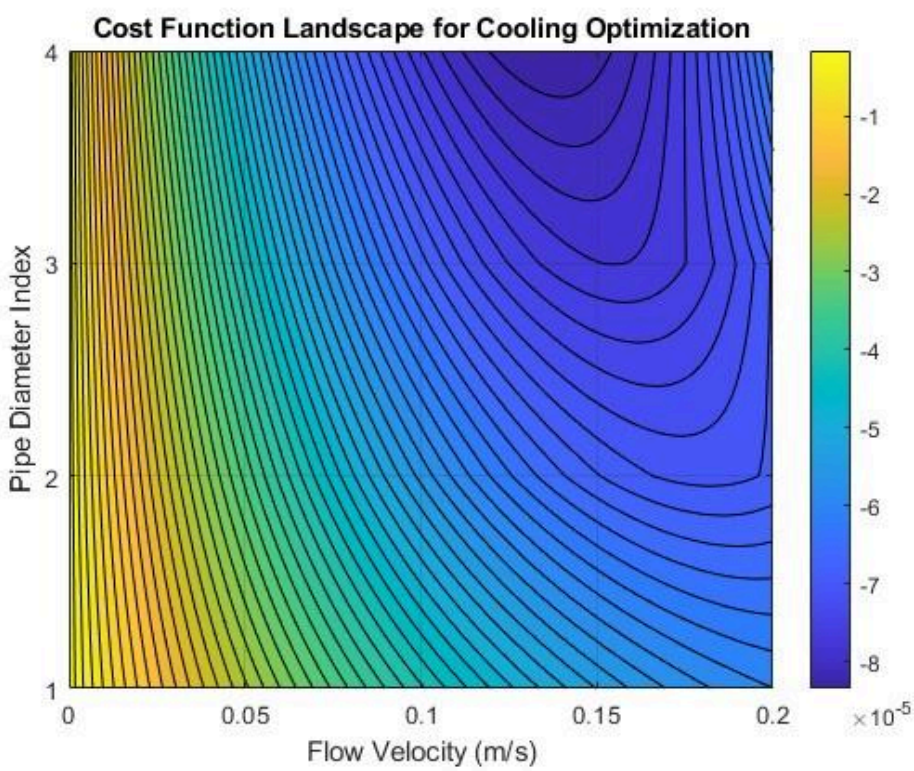

Figure 4: Cost Function Analysis Showing Insensitivity to Pipe Diameter

A formal sensitivity analysis was also performed at the end of testing and is presented later on in the report, this figure served as a benchmark in this analysis.

5. Optimization Results

The optimization converged on a profit of 13.5 million dollars per shipment, resulting in a fin length of 5mm and pipe diameter of 4mm. Results for individual runs can be seen in Table 3.

Table 3. Optimization Results for Five Runs

Run	D_{pipe}	L_{fin}	Profit
1	0.004 [m]	0.005 [m]	$13.5M
2	0.005 [m]	0.006 [m]	$13.3M
3	0.004 [m]	0.005 [m]	$13.5M
4	0.005 [m]	0.004 [m]	$13.3M
5	0.004 [m]	0.005 [m]	$13.5M

The algorithm successfully seemed to adjust the subsystem optimal values out of what they would have done individually to optimize for overall profit while still satisfying constraints. It's interesting to note that the two system parameters were always high at the beginning of the iterations to maximize cooling potential, but gradually decreased to maximize the system profit as iterations went on. The optimization seemingly reduced the overall size of the heat sink enough to deliver the minimum cool power required in order to maximize the number of units that fit in one shipment, therefore maximizing profit.

6. Post-Optimality Sensitivity Analysis

The system optimization yielded a fin length of 0.005 m, pipe diameter of 0.004 m, and optimal profit of $13.5M. To assess how changes in the system parameters affect the optimal objective value, a parameter sensitivity analysis was performed on the two key parameters: fin length and pipe diameter. Each parameter was perturbed by ±10% ($\alpha = 0.1$) from its optimized nominal value, and the resulting changes in profit were recorded. The sensitivity was calculated using a central difference approximation:

$$Sensitivity = \frac{f(x^{+}) - f(x^{-})}{2\alpha x}$$

Table 4. Results to the Parameter Sensitivity Analysis

Parameter	Nominal Value (m)	$f(x^{+})$	$f(x^{-})$	Sensitivity	% Change
L_{fin}	0.005	$12.91M	$14.14M	-1.230e+09	-9.11%
D_{pipe}	0.004	$13.02M	$14.01M	-1.229e+09	-7.28%

From the analysis, fin length (L_{fin}) is the parameter to which the objective value is most sensitive, showing the greatest percentage change and absolute sensitivity in profit when perturbed.

For constraint sensitivity, we perturbed the lower bounds of each decision variable. This choice was made because after optimization, both design variables (L_{fin} and D_{pipe}) converged close to their respective lower bounds—indicating these bounds were likely active and influential at the optimum. A 10% perturbation of the lower bound was applied, and the change in profit was used to compute sensitivity, shown in **Table 5** below.

Table 5. Results to the Constraint Sensitivity Analysis

Constraint	Nominal Value (m)	$f(x^+)$	$f(x^-)$	Sensitivity	% Change
L_{fin_lb}	0.005	$14.14M	$12.91M	1.23e+09	9.11%
D_{pipe_lb}	0.004	$14.28M	$12.80M	1.23e+09	10.94%

From this, we observe that the optimal profit is most sensitive to the lower bound of the pipe diameter, with the highest percent change and sensitivity.

7. Discussion of Results

7.1 Reality Check

In order to perform a reality check on our design, we surveyed various other heatsinks on the market that were similar in purpose to our own. Among those designed for CPUs and small electronic devices, we found that our device falls comfortably within the "middle-range" for cooling capacity, geometry, and complexity, although with some unique design choices that others don't have. Two particular heat sink devices are pictured alongside our prototype in Figure 5 below.

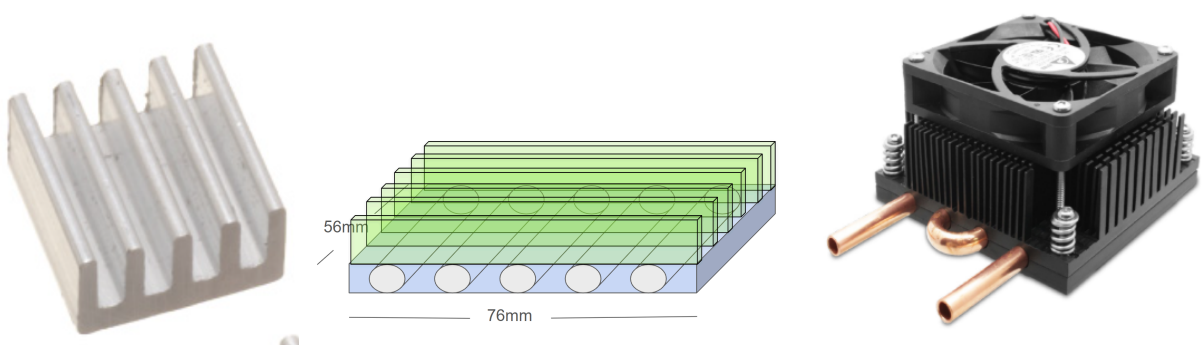

Figure 5: Comparable heat sink devices from least expensive to most expensive. Included in this figure is the Digikey Heat Sink[1](5a), our design (5b), and a High Performance Liquid Cooled fanSink[2] (5c)

In comparison to the Digikey heat sink, our design is slightly larger and has greater cooling capacity. The similarity in fin length and spacing suggests our thermal calculations are both reasonable and comparable to industry standards. On the high performance side, we found a liquid cooled heat sink that had a pipe diameter of 5.6 mm and a volume of 84 mm × 84 mm × 25.8 mm. Not only are these dimensions very similar to our device, but it also makes use of both subsystems we tested - fluid flow through pipes, and fins. The main difference between the devices is the forced convection via fan in the fanSink. While forced convection would offer better performance for our system, it well exceeds the cooling needs for our application and adds unnecessary complexity.

Due to the custom nature of our design (created with the intention to best fit a very specific CPU) it was challenging to find existing products with matching geometry or cooling performance. To further compare these products, we analyzed the thermal resistance (°C/W) of the systems. Small heat sinks, like the one from Digikey, can range from ~10–25 °C/W, while high performance products, such as the fanSink, can achieve 0.05 °C/W. Based on the allowable heat dissipation from Table 2, we estimate our device's thermal resistance to be between 0.05–0.07 °C/W. However, this may be optimistic as our passive system lacks the forced convection present in the fanSink.

7.2 Subsystem to System Comparison

A direct comparison of subsystem-optimized and system-optimized solutions highlights the value of holistic design. Subsystem optimization, focused on local performance, led to larger component sizes—fins of 0.008 m and pipes of 0.006 m—to maximize heat transfer (~251 W). However, this ignored broader system constraints like transport cost and volume. In contrast, system-level optimization balanced these trade-offs, selecting shorter fins (0.005 m) and narrower pipes (0.004 m) that reduced volume and cost, while still meeting the thermal target (≥ 250 W). Most notably, this approach nearly doubled the profit, from $6.3M to $13.5M. This comparison illustrates a key insight: optimizing subsystems in isolation yields locally optimal solutions, but only a system-level strategy can deliver the best overall performance and profitability. **Table 6** below summarizes the differences from subsystem to system.

Table 6. Comparison between Subsystem Optimized and System Optimized Solutions

Parameter	Subsystem Optimized	System Optimized
L_{fin}	0.008 m	0.005 m
D_{pipe}	0.006 m	0.004 m
Q	~251 W	≥ 250 W

Profit	$6.3M	$13.5M

7.3 Discussion and Future Work

The key result of our analysis is that a fin length of 5 mm and a pipe diameter of 4 mm successfully met the 250 W heat transfer requirement while maximizing profit by minimizing heat sink volume and transportation cost. In contrast, optimizing subsystems independently would have led to larger component sizes aimed solely at maximizing heat transfer, without accounting for transportation cost, since this was not considered in either constraints or objective functions of Subsystem 1 or 2. The system-level model demonstrated that smaller dimensions could still achieve performance targets while enhancing profitability.

Sensitivity analysis further confirmed that both fin length and pipe diameter had a substantial impact on profit, primarily due to their influence on system weight and, consequently, transport cost. These findings underscore the value of system-level optimization using Analytical Target Cascading (ATC), as the strong interdependence between subsystems necessitates a coordinated approach to avoid locally optimal but globally suboptimal solutions.

To extend and improve the design, the next step should be experimental validation to ensure that the model's heat transfer predictions align with real-world performance. Building and testing a prototype would allow us to evaluate the accuracy of the thermal circuit assumptions and refine model parameters accordingly. This process could initiate a feedback loop, enabling continuous improvement of the model by adjusting it based on observed performance data. The goal would be to achieve a closer match between predicted and actual outcomes while maintaining generalizability for different real-world scenarios.

On the profitability side, future modeling improvements should incorporate additional real-world cost factors that were not taken into account in this model. For example, while the current model favors small fin lengths and pipe diameters to minimize transport weight and cost, this design choice may come with increased manufacturing complexity and expense. Producing components with tight tolerances or intricate geometries could significantly raise production costs, potentially offsetting the gains from reduced transport cost. Incorporating manufacturability constraints and cost models into the optimization framework would create a more comprehensive and realistic assessment of trade-offs.

References

[1] “Heat Sink for Raspberry Pi 4B - Silver Aluminum,” Seeed Studio Electronic Description, Seeed Studio, updated September 17, 2019, https://mm.digikey.com.

[2] “High Performance Liquid Cooled fanSINK,” Advanced Thermal Solutions, Inc., verical, accessed April 23, 2025, https://www.verical.com/datasheet.