THE UNIVERSITY OF MICHIGAN

ME 555 Design Optimization

System optimization

System optimization model

$$
\begin{aligned}
\text{mininize} \quad & f(\boldsymbol{x}_l, \boldsymbol{x}_s, \boldsymbol{y}_l, \boldsymbol{y}_c) \\
\text{subject to} \quad & \boldsymbol{g}(\boldsymbol{x}_l, \boldsymbol{x}_s, \boldsymbol{y}_l, \boldsymbol{y}_c) \leq \boldsymbol{0} \\
& \boldsymbol{h}(\boldsymbol{x}_l, \boldsymbol{x}_s, \boldsymbol{y}_l, \boldsymbol{y}_c) = \boldsymbol{0} \\
& \boldsymbol{y}_l = \boldsymbol{a}_l(\boldsymbol{x}_l, \boldsymbol{x}_s, \boldsymbol{y}_c) \\
& \boldsymbol{y}_c = \boldsymbol{a}_c(\boldsymbol{x}_l, \boldsymbol{x}_s, \boldsymbol{y}_c) \\
& \boldsymbol{x}_l \in S_l \\
& \boldsymbol{x}_s \in S_s
\end{aligned}
$$

- System analysis functions:
  - Local analysis functions $\boldsymbol{a}_l : S_l \times S_s \times T_c \mapsto T_l$: collection of subsystem analysis functions that are *not* coupled each other (*i.e.*, an output of a subsystem is *not* an input of another subsystem).
  - Coupled analysis functions $\boldsymbol{a}_c : S_l \times S_s \times T_c \mapsto T_c$: collection of subsystem analysis functions that are coupled each other (*i.e.*, an output of a subsystem is an input of another subsystem).
- Design variables
  - Local (design) variables $\boldsymbol{x}_l \in S_l$: design variables that are inputs of only one subsystem analysis function (design variables that are local to the subsystem).
  - Shared variables $\boldsymbol{x}_s \in S_s$: design variables that are are the inputs of multiple subsystem analysis functions.
- Intermediate variables
  - Local (intermediate) variables $\boldsymbol{y}_l \in T_l$: the outputs of $\boldsymbol{a}_l$ and not the inputs of any subsystems.
  - Coupling variables $\boldsymbol{y}_c \in T_c$: the outputs of $\boldsymbol{a}_c$ and also the inputs of $\boldsymbol{a}_c$.
- Linking variables = shared variables + coupling variables
- System flow diagram:

© 2025 by K. Saitou

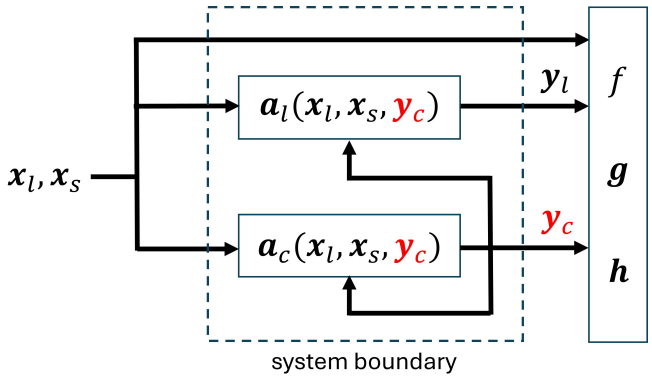

Multidisciplinary feasible (MDF) formulation

$$
\begin{aligned}
\text{mininize} \quad & f(\boldsymbol{x}_l, \boldsymbol{x}_s, \boldsymbol{y}_l, \boldsymbol{y}_c) \\
\text{subject to} \quad & \boldsymbol{g}(\boldsymbol{x}_l, \boldsymbol{x}_s, \boldsymbol{y}_l, \boldsymbol{y}_c) \leq \boldsymbol{0} \\
& \boldsymbol{h}(\boldsymbol{x}_l, \boldsymbol{x}_s, \boldsymbol{y}_l, \boldsymbol{y}_c) = \boldsymbol{0} \\
& \boldsymbol{y}_l = \boldsymbol{a}_l(\boldsymbol{x}_l, \boldsymbol{x}_s, \boldsymbol{y}_c) \\
& \boldsymbol{y}_c = \widetilde{\boldsymbol{a}}_c(\boldsymbol{x}_l, \boldsymbol{x}_s) \\
& \boldsymbol{x}_l \in S_l \\
& \boldsymbol{x}_s \in S_s
\end{aligned}
$$

- Resolved coupled analysis functions $\widetilde{\boldsymbol{a}}_c : S_l \times S_s \mapsto T_c$: explicit analysis functions of coupled subsystems obtained by numerically solving implicit functions $\boldsymbol{b}_c(\boldsymbol{x}_l, \boldsymbol{x}_s, \boldsymbol{y}_c) = \boldsymbol{0}$, where
$$\boldsymbol{b}_c(\boldsymbol{x}_l, \boldsymbol{x}_s, \boldsymbol{y}_c) \equiv \boldsymbol{y}_c - \boldsymbol{a}_c(\boldsymbol{x}_l, \boldsymbol{x}_s, \boldsymbol{y}_c)$$
- System flow diagram:

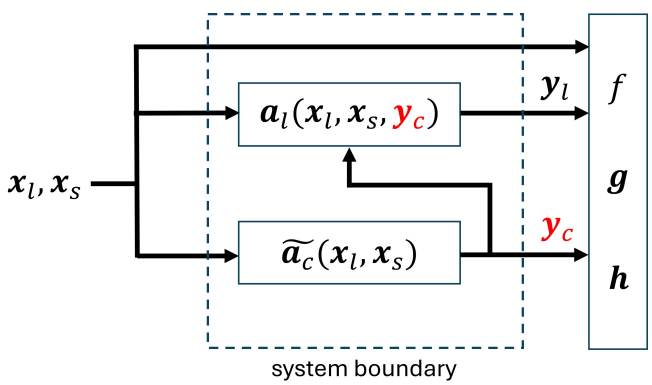

- MDF resolves coupling variables $\boldsymbol{y}_c$ at each optimization iteration
  - computationally expensive, especially with strong subsystem coupling (= high $\partial \boldsymbol{a}_c / \partial \boldsymbol{y}_c$)

- sometimes fails to resolve with strong subsystem coupling (= high $\partial \boldsymbol{a}_c / \partial \boldsymbol{y}_c$) $\longrightarrow$ the entire optimization fails.
- suitable for the systems with weak subsystem coupling (= low $\partial \boldsymbol{a}_c / \partial \boldsymbol{y}_c$).

Individual disciplinary feasible (IDF) formulation

$$
\begin{aligned}
\text{mininize} \quad & f(\boldsymbol{x}_l, \boldsymbol{x}_s, \boldsymbol{y}_l, \widetilde{\boldsymbol{y}}_c) \\
\text{subject to} \quad & \boldsymbol{g}(\boldsymbol{x}_l, \boldsymbol{x}_s, \boldsymbol{y}_l, \widetilde{\boldsymbol{y}}_c) \leq \boldsymbol{0} \\
& \boldsymbol{h}(\boldsymbol{x}_l, \boldsymbol{x}_s, \boldsymbol{y}_l, \widetilde{\boldsymbol{y}}_c) = \boldsymbol{0} \\
& \boldsymbol{y}_l = \boldsymbol{a}_l(\boldsymbol{x}_l, \boldsymbol{x}_s, \widetilde{\boldsymbol{y}}_c) \\
& \boldsymbol{y}_c = \boldsymbol{a}_c(\boldsymbol{x}_l, \boldsymbol{x}_s, \widetilde{\boldsymbol{y}}_c) \\
& \widetilde{\boldsymbol{y}}_c = \boldsymbol{y}_c \\
& \boldsymbol{x}_l \in S_l \\
& \boldsymbol{x}_s \in S_s \\
& \widetilde{\boldsymbol{y}}_c \in T_c
\end{aligned}
$$

- Auxiliary coupling variable $\widetilde{\boldsymbol{y}}_c$:
  - estimate of (real) coupling variables $\boldsymbol{y}_c$ for removing the feedback loop of $\boldsymbol{a}_c$
  - regarded as additional design variables $\longrightarrow$ shared variables between $\boldsymbol{a}_l$ and $\boldsymbol{a}_c$.
  - accompanied by auxiliary equality constraints $\widetilde{\boldsymbol{y}}_c = \boldsymbol{y}_c$.
- System flow diagram:

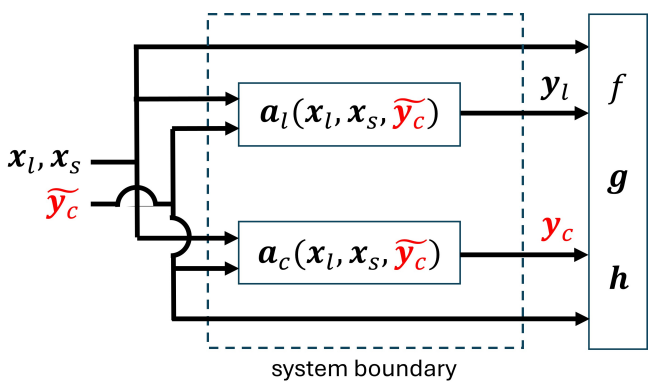

- IDF resolves coupling variables $\boldsymbol{y}_c$ only at the optimization convergence
  - computationally inexpensive even with strong subsystem coupling (= high $\partial \boldsymbol{a}_c / \partial \boldsymbol{y}_c$)
  - sometimes converges to a solution without fully-resolved (hence infeasible) coupling variables
  - suitable for the systems with a wide range of subsystem coupling (= low to high $\partial \boldsymbol{a}_c / \partial \boldsymbol{y}_c$).

Analytical Target Cascading (ATC) formulation

- Works with *unlinked* system optimization model:

$$\begin{array}{ll} \text{mininize} & f(\boldsymbol{x}_l, \boldsymbol{y}_l) \\ \text{subject to} & \boldsymbol{g}(\boldsymbol{x}_l, \boldsymbol{y}_l) \leq \boldsymbol{0} \\ & \boldsymbol{h}(\boldsymbol{x}_l, \boldsymbol{y}_l) = \boldsymbol{0} \\ & \boldsymbol{y}_l = \boldsymbol{a}_l(\boldsymbol{x}_l) \\ & \boldsymbol{x}_l \in S_l \end{array}$$

  - Coupled variables $\boldsymbol{y}_c$ can be decoupled by introducing an auxiliary variables $\tilde{\boldsymbol{y}}_c$ and an auxiliary equality constraint $\tilde{\boldsymbol{y}}_c = \boldsymbol{y}_c$ as done in the IDF formulation.
  - Shared variables $\boldsymbol{x}_s$ (possibly including some elements of $\tilde{\boldsymbol{y}}_c$) can be decoupled, for each element x_{si} of $\boldsymbol{x}_s$, by introducing auxiliary shared variables $\tilde{x}_{si,1}, \tilde{x}_{si,2}, \cdots \tilde{x}_{si,n_i}$ to each of n_i subsystems where x_{si} is shared, and auxiliary equality constraints $\tilde{x}_{si,1} = \tilde{x}_{si,2} = \cdots = \tilde{x}_{si,n_i}$.

- *Decomposition tree* of an unlinked system optimization model is an arborescence (a directed rooted tree) $G_d = (V, E)$ rooted at $v_0 \in V$, with each node $v \in V$ associated with *ATC optimization problem* $\mathcal{P}_v$ of subsystem v:

$$\begin{array}{ll} \text{mininize} & f_v(\boldsymbol{x}_v) + \phi(\boldsymbol{t}_v - \boldsymbol{r}_v(\boldsymbol{x}_v)) + \displaystyle\sum_{w \in Adj(v)} w_w \phi(\boldsymbol{t}_w - \boldsymbol{r}_w(\boldsymbol{x}_w^*)) \\ \text{subject to} & \boldsymbol{g}(\boldsymbol{x}_v) \leq \boldsymbol{0} \\ & \boldsymbol{h}(\boldsymbol{x}_v) = \boldsymbol{0} \\ & \boldsymbol{x}_v \in S_v \\ & \boldsymbol{t}_w \in T_w,\ w \in Adj(v) \end{array}$$

  where

  - $\boldsymbol{t}_v \in T_v$ is *target* of subsystem v.
  - $\boldsymbol{r}_v : S_v \mapsto T_v$ is *response* function of subsystem v.
  - $\phi : T_v \mapsto \mathbf{R}$ is *loss function*: typically quadratic $\phi(\boldsymbol{x}) = \sum \omega_i x_i^2$ or augmented Lagrangian $\phi(\boldsymbol{x}) = \boldsymbol{v}^T \boldsymbol{x} + \sum \omega_i x_i^2$ ($\boldsymbol{v}$ and $\boldsymbol{\omega}$ are weights).
  - $w_w \in \mathbf{R}$: weight for target loss for child node $w \in Adj(v)$.

- Design variables of $\mathcal{P}_v$ (ATC design variables) are system design variables $\boldsymbol{x}_v$ and subsystem target $\boldsymbol{t}_w$ for each child subsystem w.

- Objective function of $\mathcal{P}_v$ (ATC objective) has a term for the (weighted sum of) target losses of the optimal responses $\boldsymbol{r}_w(\boldsymbol{x}_w^*)$ for child nodes $w \longrightarrow$ child subproblems $\mathcal{P}_w$ of v are solved at each iteration of solving $\mathcal{P}_v$, in a *bottom up* manner from the terminal leaves to the root of G_d.

- Each ATC optimization problem $\mathcal{P}_v$ are solved *separately* in a *nested* manner:
  - Each $\mathcal{P}_v$ can use a different optimization algorithm.
  - All $\mathcal{P}_v$'s of the same parent can be solved in parallel.
  - Each $\mathcal{P}_v$ can return before convergence during early iterations of its parent system opt.
- Formulation steps:
  1. Decouple coupling variables and then shared variables to create an unlinked optimization model.
  2. Hierarchically decompose the system to form $G_d = (V, E)$.
  3. Define target-response pairs for each edge $e \in E$.
  4. Set up ATC optimization subproblem $\mathcal{P}_v$ for each node $v \in V$.
- Analogy for *requirement flow-down* in the product development process: ATC can be used to define subsystem requirements.