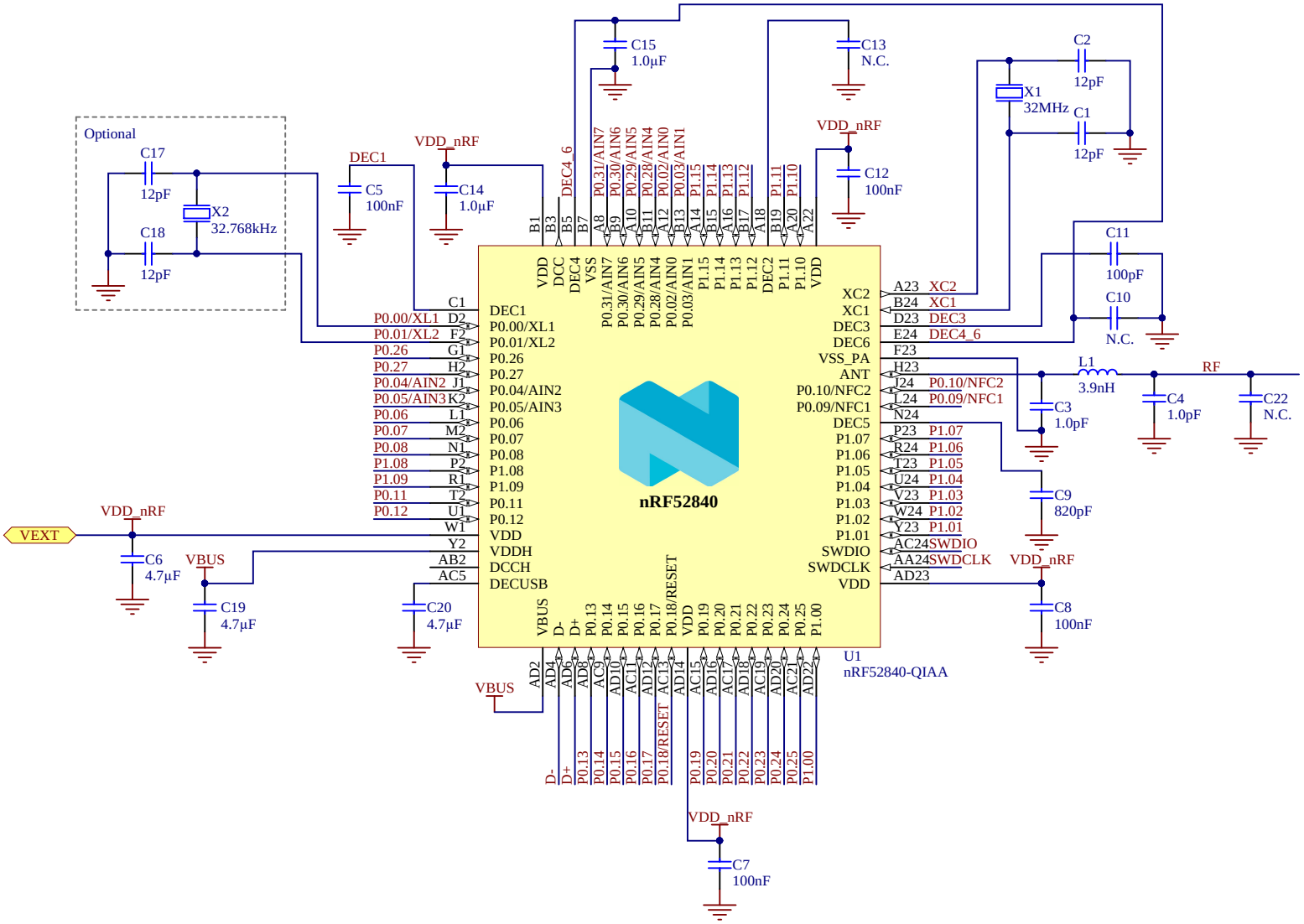

Title: nRF52840-QIAA Ref. Layout (LDO only, VBUS supply)		
Size: A4	Project Number	Revision: 1.0
Date: 16.03.2018		Sheet 1 of 1
File: nrf52840_qiaa_var1.SchDoc		Drawn By: RUBR

NORDIC SEMICONDUCTOR