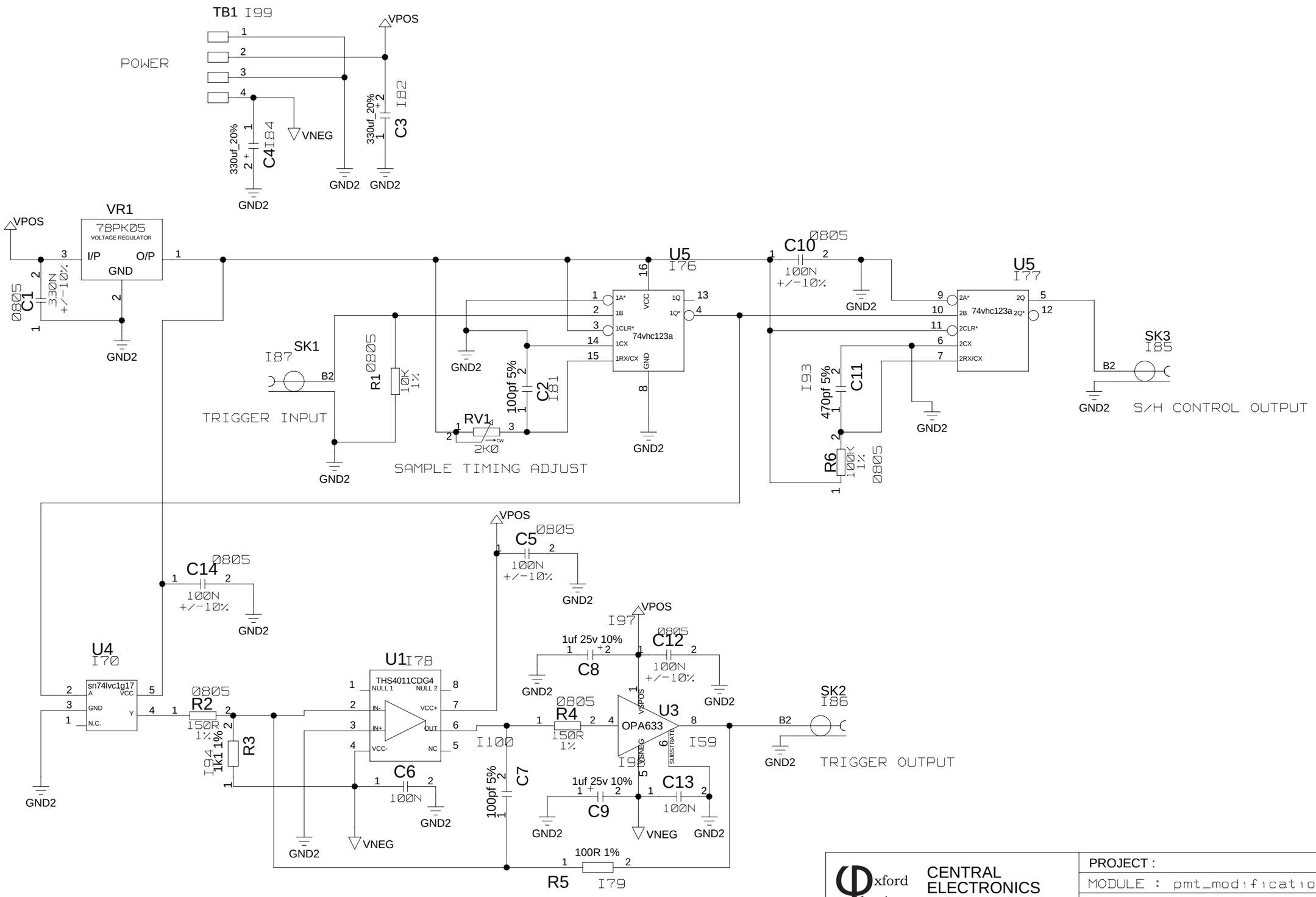

CENTRAL ELECTRONICS GROUP

UNIVERSITY OF OXFORD
DEPARTMENT OF PHYSICS
DENYS WILKINSON BUILDING
KEBLE ROAD
OXFORD, OX1 3RH

PROJECT :

MODULE : pmt_modification

PMT DIGITAL ELECTRONICS

LAST CHANGE : Tue Mar 05 11:09:23 2013

SHEET <CURRENT_DESIGN_SHEET> OF <TOTAL_DESIGN_SHEETS>