2023 8th International Conference on Intelligent Computing and Signal Processing (ICSP) | 979-8-3503-0245-5/23/$31.00 ©2023 IEEE | DOI: 10.1109/ICSP58490.2023.10248763

# A 10MS/s 12 bits successive approximation ADC using an extended C-2C capacitor array

Yuhao Duan
School of Microelectronics
Shandong University
Jinan, China
yh.duan@foxmail.com

Chao Cao *
School of Microelectronics
Shandong University
Jinan, China
chao_cao@sdu.edu.cn

Hui Xu
School of Microelectronics
Shandong University
Jinan, China
xx_hui@qq.com

***Abstract*—This paper presents a 10 MS/s 12 bits SAR ADC based on the extended C-2C capacitor array structure. This successive approximation ADC (SAR ADC) adopts the extended C-2C segmented DAC technology. Therefore, it provides a better balance between the area and resolution of the capacitor array, facilitates the subsequent layout work and improves the matching accuracy of the capacitor array. The SAR ADC adopts gate voltage bootstrap switch circuit to sample the input signal, the DAC adopts a 12 bits extended C-2C capacitor array structure, the comparator adopts Pre-Amp and latch structure and the conversion process adopts synchronous timing logic control, which is realized on the 55nm CMOS process. When Nyquist frequency is input, the simulation results show that SNR, SFDR and ENOB of the SAR ADC are 73.6dB, 83.3dB and 11.9 bits respectively. After extracting parasitic parameters, the SAR ADC simulation results show that SNR is 63.8dB, SFDR is 73.3dB, and ENOB is 10.3 bits.**

***Keywords*—SAR ADC, CADC, C-2C**

## I. INTRODUCTION

As the bridge between analog and digital signals, analog-to-digital converter (ADC) plays an important role in many fields, such as aviation, aerospace, military, communication, medical and so on [1]. SAR ADC is widely used in the field of information technology because of its high precision and low power consumption. As one of the most important modules in SAR ADC, capacitor array has an important impact on the speed, accuracy and power consumption of ADC.

With the improvement of ADC accuracy, the total capacitance of traditional capacitor array increases exponentially, which has a great adverse impact on its power consumption, area and speed [2-4]. Therefore, for high-precision SAR ADC, it is necessary to adopt segmented DAC structure, which can reduce the size of total capacitance, thus reduce the adverse impact on ADC power consumption, area and speed. Traditional C-2C capacitor array structure can achieve smaller area than binary DAC [5]. However, the parasitic capacitance on the C-2C DAC interconnection node seriously hinders its linearity and limits its resolution to 4-6 bits [6-9]. The capacitor array structure proposed in this paper is improved on the traditional C-2C capacitor array structure. It can achieve smaller area than binary DAC and reduce the design difficulty of segmented DAC under the requirement of resolution.

This paper presents a SAR ADC based on the extended C-2C capacitor array structure. The array can ensure that each capacitor is an integral multiple of the unit capacitance and meets the binary weight. The design adopts 55nm CMOS process, the sampling rate is 10MS/s, and the ENOB is 12 bits, which effectively reduces the chip area and design difficulty.

## II. CIRCUIT DESIGN

### A. Extended C-2C capacitor array

As shown in Figure 1, an extended C-2C structure multi segment capacitor array proposed in this paper includes: M-bit capacitor array composed of N segments of each S-bit capacitor, n-1 bridge capacitors, one redundant capacitor, input stage and output stage.

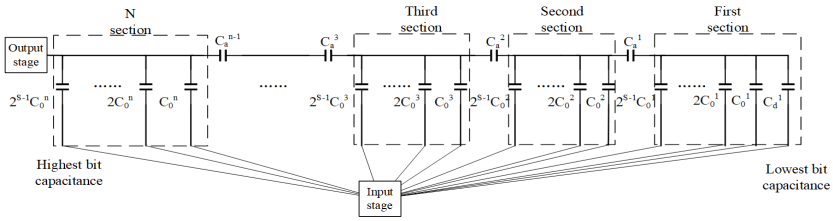


Fig.1. Extended C-2C capacitor array



Authorized licensed use limited to: California Polytechnic State University San Luis Obispo. Downloaded on February 06,2026 at 23:25:33 UTC from IEEE Xplore. Restrictions apply.

The lowest bit capacitance of each capacitor array ($C_0^i$)) meets 2S-1 times the unit capacitance of the previous section ($C_0^{i-1}$), as shown in formula (1):

$$C_0^i = (2S-1)C_0^{i-1} (i = 2,3,\dots,n) \quad (1)$$

In order to ensure that each bit capacitance from the lowest bit to the highest bit satisfies the binary weight relationship, the bridge capacitance ($C_a^i$) as it is shown in formula (2):

$$C_a^i = 2^S C_0^i (i = 1,2,\dots\dots,n-1) \quad (2)$$

Compared with the traditional C-2C capacitor array structure, the extended C-2C capacitor array structure reduces the parasitic capacitance of nodes on the basis of ensuring the binary relationship of each bit capacitance. It can achieve a resolution of more than 6 bits and reduce the area of capacitor array.

*B. 12 bits SAR ADC with 4-segment capacitor array*

The 12 bits SAR ADC designed in this paper consists of gate voltage bootstrap switch circuit, comparator circuit, extended C-2C capacitor array and SAR logic control circuit.

Among them, the sampling switch adopts the gate voltage bootstrap switch circuit. The circuit schematic diagram is shown in Figure 2. The gate source voltage of the CMOS is constant as the power supply voltage ($V_{DD}$), and the on resistance of the switch does not change with the input signal, which improves the linearity of the switch [10]. The designed bootstrap switch ENOB is 15.2 bits and SNDR is 99.6 dB, which is better than the overall SAR ADC accuracy requirements.

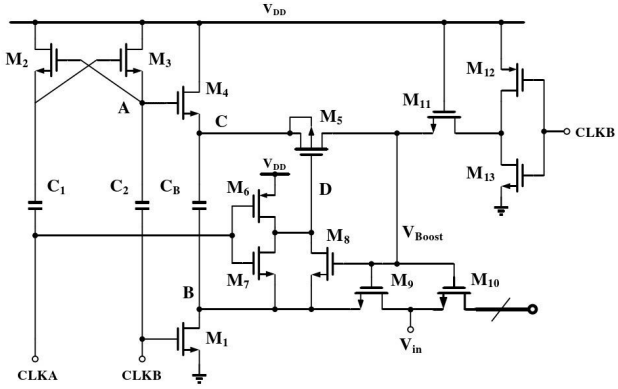


Figure 2 Gate voltage bootstrap sampling switch circuit

The comparator circuit adopts Pre-Amp and dynamic latch structure, which only works when the clock is high level, so it has low power consumption. The comparator designed in this paper achieves 0.14mV resolution, 0.3ns delay and 3.89mV offset voltage.

The segmented capacitor array adopts a 12 bits 4-segment extended C-2C structure, as shown in Figure 3. The values of the first to twelfth bit capacitors ($C_1$-$C_{12}$) from low to high are $C_0$, $C_0$, $2C_0$, $2C_0$, $4C_0$, $8C_0$, $16C_0$, $32C_0$, $64C_0$, $64C_0$, $128C_0$, $256C_0$ respectively.

The values of the first to third bridging capacitors are $4C_0$, $8C_0$,$32C_0$ respectively. The value of redundant capacitance in the lowest section is $C_0$, where $C_0$ is the unit capacitance and the capacitance is 10 fF. Compared with the traditional 12 bits binary capacitor array structure, the total capacitance of the extended C-2C segmented capacitor structure is reduced by 82.6%.

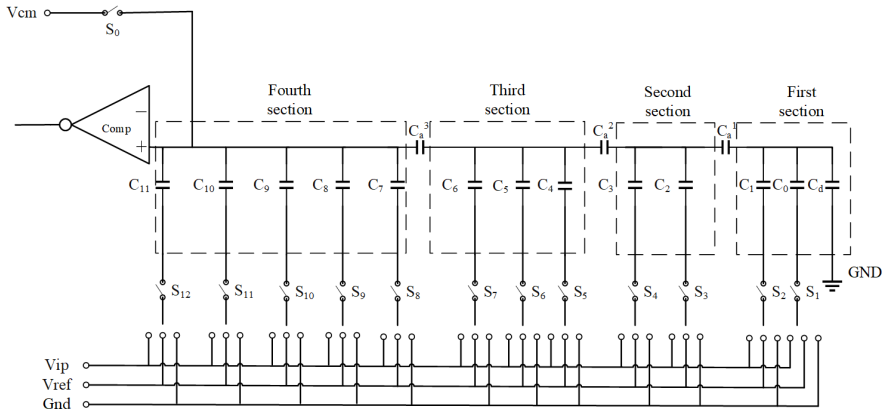


Fig.3. 12 bits extended C-2C capacitor array

This article uses a synchronous sequential approximation algorithm for control. The schematic diagram is shown in Figure 4 and consists of 26 D flip-flops. CLK is the timing control signal, COMP is the comparison result of the comparator, and RST is the reset signal. It is responsible for resetting the logic control circuit after completing a conversion. These 26 D flip-flops complete the functions of storing conversion results and achieving primary and secondary approximation based on comparison results under the control of the clock CLK.



Authorized licensed use limited to: California Polytechnic State University San Luis Obispo. Downloaded on February 06,2026 at 23:25:33 UTC from IEEE Xplore. Restrictions apply.

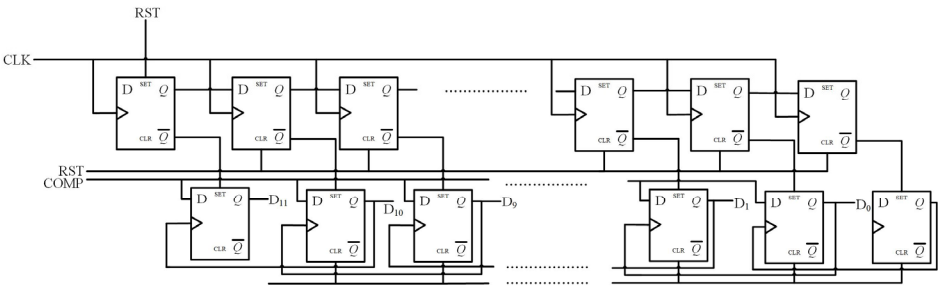


Figure 4 Synchronous timing successive approximation control circuit

## III. Simulation Result

In order to study the performance of the designed 12-bit extended C-2C capacitor array, a 1024 node FFT simulation was performed separately. The FFT simulation results are shown in Figure 5. The results show that the extended C-2C capacitor array designed in this article has an ENOB of 11.93 bits, SINAD of 73.62dB, SNR of 73.69dB, and SFDR of 90.80dBc.

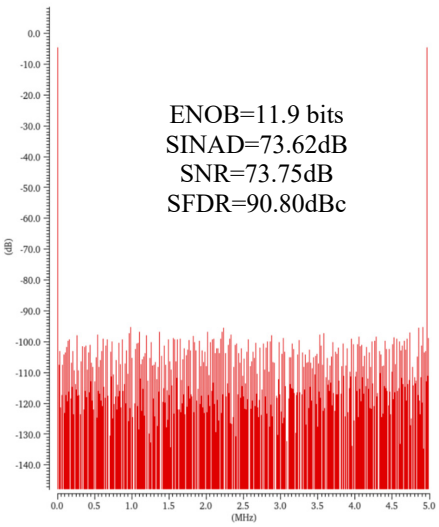


Fig.5. FFT result of the CDAC simulation

This paper builds a 12 bits SAR ADC based on the extended C-2C capacitor array popularized above. An ideal 12-bit DAC is used to restore the output signal. The test circuit uses a 1.2V power supply, samples a 10MHz square wave, and inputs a sine wave. The common mode level is 0.6V, the amplitude is 0.6V, and the input signal frequency is 4.9707MHz. Perform transient simulation and perform Fast Fourier Transform (FFT) on the results, taking 1024 points to obtain the simulation results as shown in Figure 6. According to spectrum analysis, ENOB=11.83 bits, SINAD=72.97 dB, SNR=73.12 dB, and SFDR=89.13 dBc.

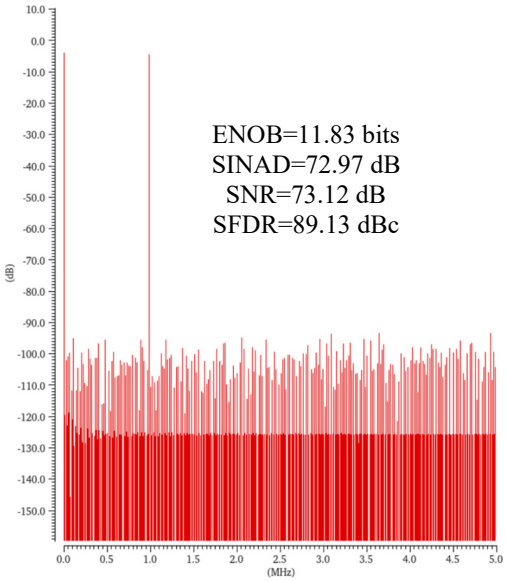


Fig. 6. FFT result of the ADC simulation

In order to fully consider the difference of chip production under different circumstances of Foundry, simulation verification of different Process corners and ambient temperatures was also carried out. Specific parameters are shown in Table 1.

TABLE 1. Process corners and temperatures simulation results summary

| | Temperature (℃) | ENOB (bits) | SINAD (dB) | SFDR (dBc) |
|---|---|---|---|---|
| tt | -40 | 11.79 | 72.74 | 88.87 |
| tt | 25 | 11.83 | 72.97 | 89.13 |
| tt | 125 | 11.71 | 72.25 | 88.68 |
| ff | -40 | 11.75 | 72.49 | 88.75 |
| ff | 25 | 11.78 | 72.68 | 88.82 |
| ff | 125 | 11.69 | 72.13 | 87.62 |
| fs | -40 | 11.78 | 72.67 | 88.83 |
| fs | 25 | 11.81 | 72.85 | 88.96 |
| fs | 125 | 11.70 | 72.19 | 87.65 |
| sf | -40 | 11.79 | 72.74 | 88.87 |
| sf | 25 | 11.82 | 72.91 | 89.07 |
| sf | 125 | 11.47 | 70.81 | 79.93 |
| ss | -40 | 11.36 | 70.15 | 79.03 |
| ss | 25 | 11.34 | 70.03 | 76.79 |
| ss | 125 | 9.62 | 59.67 | 62.12 |



Authorized licensed use limited to: California Polytechnic State University San Luis Obispo. Downloaded on February 06,2026 at 23:25:33 UTC from IEEE Xplore. Restrictions apply.

The circuit layout is designed in accordance with the principle of high symmetry to ensure the consistency of the surrounding environment of each component as much as possible, as shown in Figure 7.

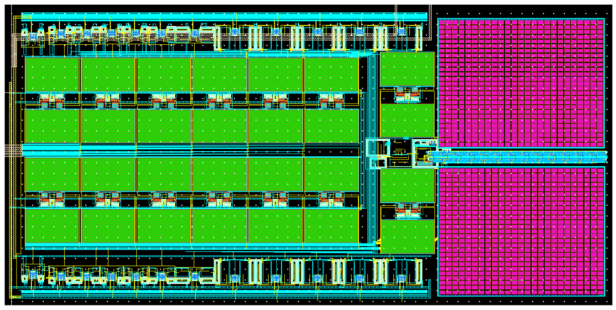

Fig. 7. SAR ADC layout

After completing the SAR ADC layout, extract the parasitic parameters. Similarly, a 12 bits ideal DAC is used to restore the output signal. The test circuit uses a 1.2V power supply, samples a 10MHz square wave, inputs a sine wave, a common mode level of 0.6V, an amplitude of 0.6V, and an input signal frequency of 4.9707MHz. Perform transient simulation and perform Fast Fourier Transform (FFT) on the results, taking 1024 points to obtain the simulation results as shown in Figure 8. According to spectrum analysis, ENOB=10.31 bits, SINAD=63.87 dB, SNR=63.88 dB, SFDR=72.16 dBc. Under this condition, the overall power consumption of ADC is 2.9mW, and the SAR ADC quality factor of this design is calculated as 228 fJ/Conv-step.

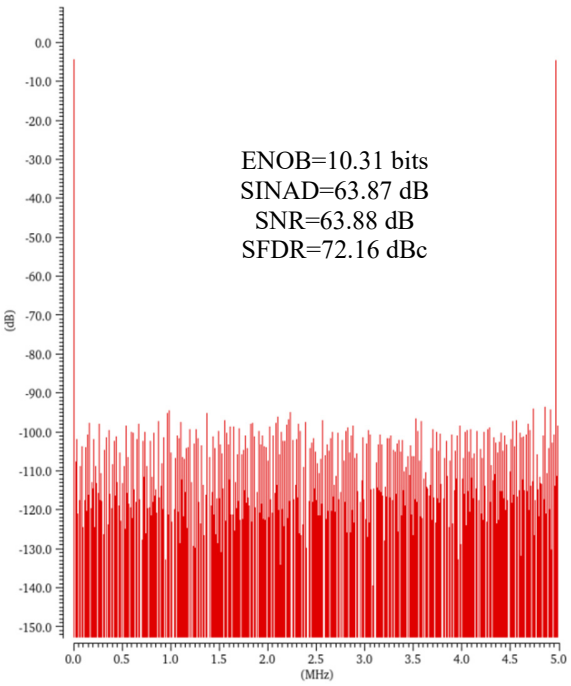


Fig. 8. FFT result of the ADC simulation

## IV. Conclusions

In this paper, an extended C-2C capacitor array is proposed, and 12 bits, 10MS/s sampling rate SAR ADC is designed using 55nm CMOS process. The 12 bits capacitor array in ADC adopts a 4-segment structure, which reduces the total capacitance by 82.6% compared with the traditional binary capacitor array structure. The simulation results show that the capacitor array ENOB is 11.9 bits, which meets the design requirements. The simulation results of SAR ADC show that when the sampling rate is 10 MS/s and the power supply voltage is 1.2 V, the SNR is 73.12 dB, the SFDR is 89.13 dB and the ENOB is 11.83 bits. After extracting parasitic parameters, the SAR ADC simulation results show that SNR is 63.88dB, SFDR is 72.16dB, and ENOB is 10.31 bits.

## Acknowledgments

This work was supported by the Young Scientists Fund of the National Natural Science Foundation of China (Grant No. 62004115) and the Young Scientists Fund of Shandong Provincial Natural Science Foundation (Grant No. ZR2020QF023).

## References

[1] Y. -P. Guo, J. -Q. Jiang, N. Ding and Y. -C. Chang, 2020 IEEE 15th International Conference on Solid-State & Integrated Circuit Technology (ICSICT), pp. 1-3, (2020).

[2] Chang A H, Cambridge, USA: MIT, (2013).

[3] Matsuo S, Bales T J, Shoda M, IEEE Transactions on Electron Devices, pp. 2380-2389, (2009).

[4] Xu R, Liu B, Yuan J, IEEE Journal of Solid-State Circuits, pp.2129-2140, (2012).

[5] L.Cong and W.C.Black, Proc. 43rd IEEE Midwest Symposium on Circuits and Systems, (2000).

[6] H. Balasubramaniam, W. Galjan, W. H. Krautschneider and H. Neubauer, 2009 3rd International Conference on Signals, Circuits and Systems (SCS),pp. 1-5, (2009).

[7] N. Papadopoulos, S. Steudel, A. J. Kronemeijer, M. Ameys and K. Myny, "Flexible 16nJ/c.s. 134S/s 6b MIM C-2C ADC using Dual Gate Self-aligned Unipolar Metal-Oxide TFTs," 2019 IEEE Custom Integrated Circuits Conference (CICC), Austin, TX, USA, 2019, pp. 1-4.

[8] N. P. Papadopoulos et al., "Toward Temperature Tracking With Unipolar Metal-Oxide Thin-Film SAR C-2C ADC on Plastic," in IEEE Journal of Solid-State Circuits, vol. 53, no. 8, pp. 2263-2272, Aug. 2018.

[9] Y. -m. Liao and T. -c. Lee, "A 6-b 1.3Gs/s A/D Converter with C-2C Switch-Capacitor Technique," 2006 International Symposium on VLSI Design, Automation and Test, Hsinchu, Taiwan, 2006, pp. 1-4.

[10] W. Zhao et al., "Improved Complementary Bootstrap Switch Based on Negative Voltage Bootstrap Capacitance," 2022 IEEE 16th International Conference on Solid-State & Integrated Circuit Technology (ICSICT), Nangjing, China, 2022, pp. 1-3.



Authorized licensed use limited to: California Polytechnic State University San Luis Obispo. Downloaded on February 06,2026 at 23:25:33 UTC from IEEE Xplore. Restrictions apply.