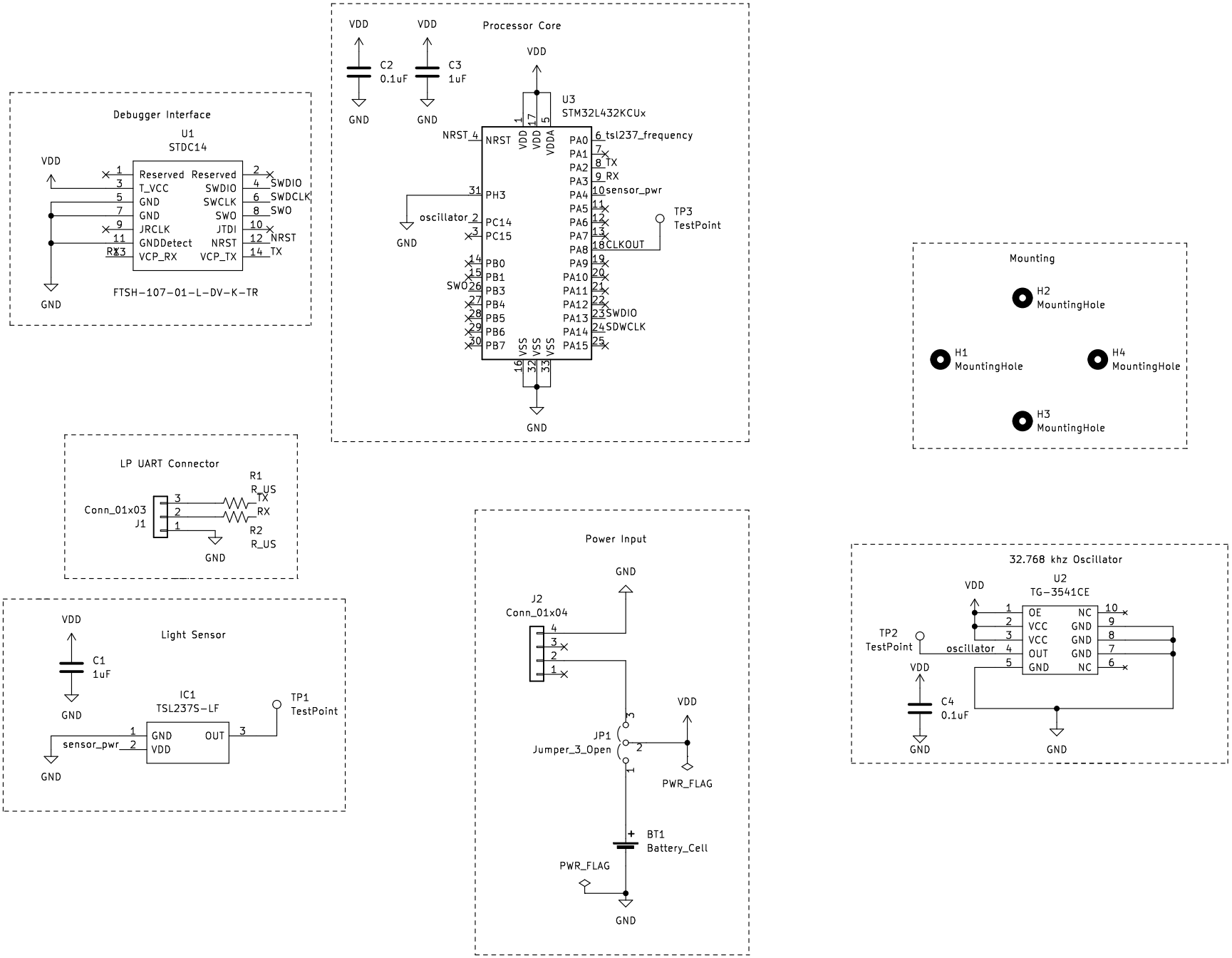
Debugger Interface
U1
STDC14
VDD
Reserved Reserved
T_VCC SWDIO
GND SWCLK
GND SWO
JRCLK JTDI
GNDDetect NRST
VCP_RX VCP_TX
SWDIO
SWDCLK
SWO
NRST
TX
RX
GND
FTSH-107-01-L-DV-K-TR
Processor Core
VDD
C2
0.1uF
C3
1uF
GND
U3
STM32L432KCUx
NRST
VDD
VDDA
PA0 tsl237_frequency
PA1
PA2 TX
PA3 RX
PA4 sensor_pwr
PA5
PA6
PA7
PA8 CLKOUT
PA9
PA10
PA11
PA12
PA13 SWDIO
PA14 SDWCLK
PA15
PH3
oscillator
PC14
PC15
PB0
PB1
SWO
PB3
PB4
PB5
PB6
PB7
VSS
TP3
TestPoint
Mounting
H2
MountingHole
H1
MountingHole
H4
MountingHole
H3
MountingHole
LP UART Connector
R1
R_US
Conn_01x03
J1
TX
RX
R2
R_US
GND
Light Sensor
VDD
C1
1uF
GND
IC1
TSL237S-LF
GND
VDD
OUT
sensor_pwr
TP1
TestPoint
Power Input
GND
J2
Conn_01x04
VDD
JP1
Jumper_3_Open
PWR_FLAG
BT1
Battery_Cell
PWR_FLAG
GND
32.768 khz Oscillator
U2
TG-3541CE
VDD
OE NC
VCC GND
VCC GND
OUT GND
GND NC
TP2
TestPoint
oscillator
C4
0.1uF
GND