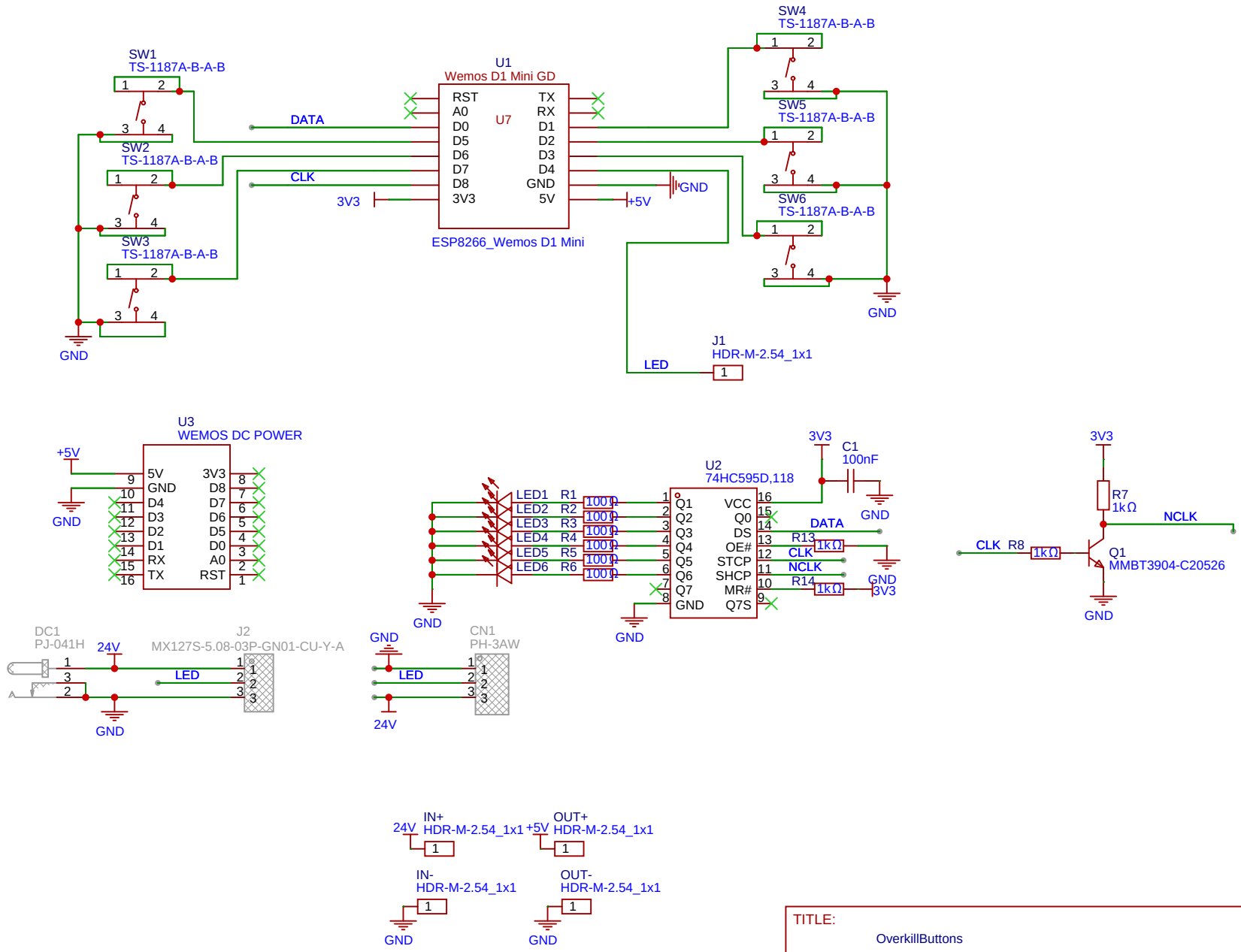

TITLE: OverkillButtons		REV: 1.0
EasyEDA	Company: Your Company	Sheet: 1/1
	Date: 2024-11-19	Drawn By: aburtoncricut