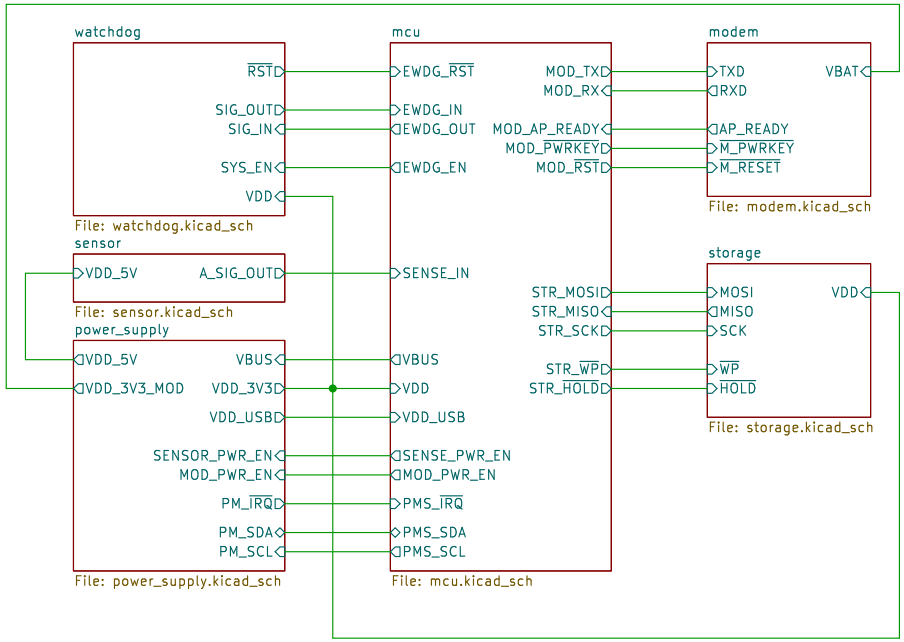

Sheet: /
File: SoilMoistureIoT.kicad_sch

Title:

Size: A4	Date:	**Rev:**
KiCad E.D.A. 9.0.2		Id: 1/10

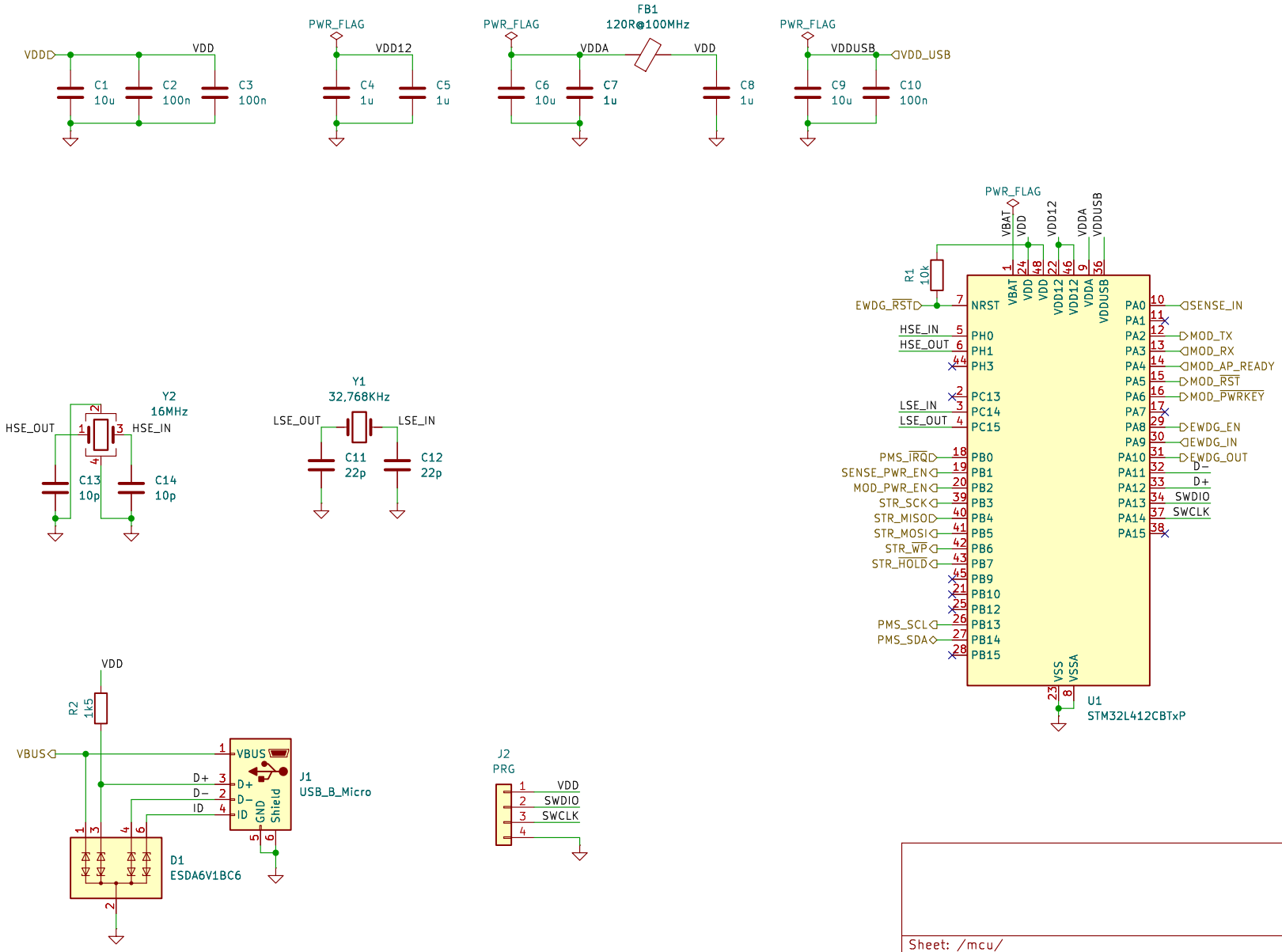

Sheet: /mcu/
File: mcu.kicad_sch

Title:

Size: A4	Date:	Rev:
KiCad E.D.A. 9.0.2		Id: 2/10

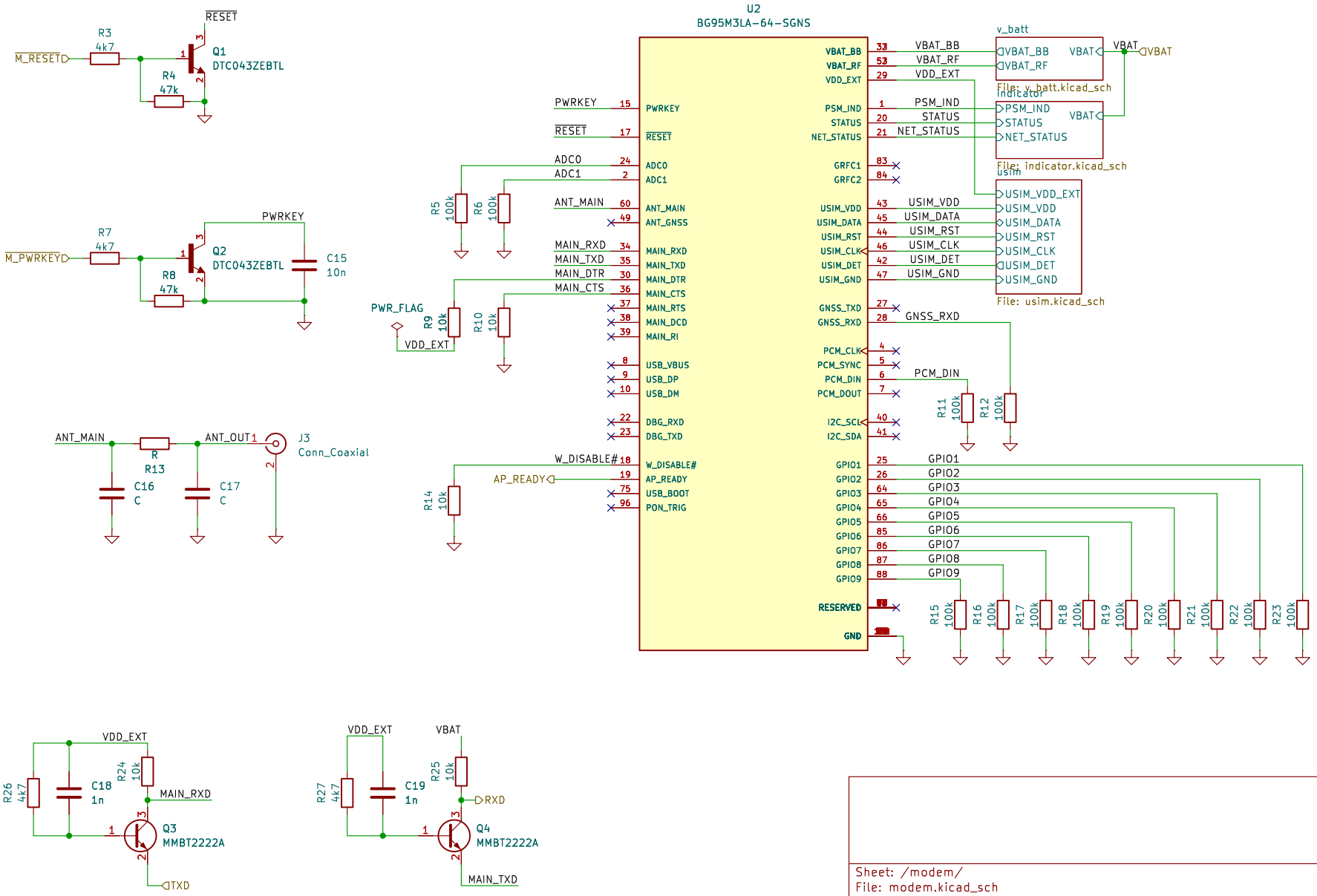

Sheet: /modem/
File: modem.kicad_sch

Title:

Size: A4	Date:	Rev:
KiCad E.D.A. 9.0.2		Id: 3/10

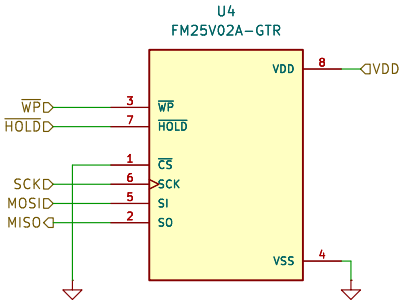

Sheet: /storage/
File: storage.kicad_sch

Title:

Size: A4	Date:	Rev:
KiCad E.D.A. 9.0.2		Id: 7/10

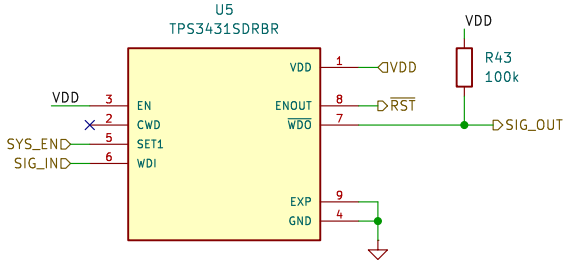

Sheet: /watchdog/
File: watchdog.kicad_sch

Title:

Size: A4	Date:	Rev:
KiCad E.D.A. 9.0.2		Id: 8/10

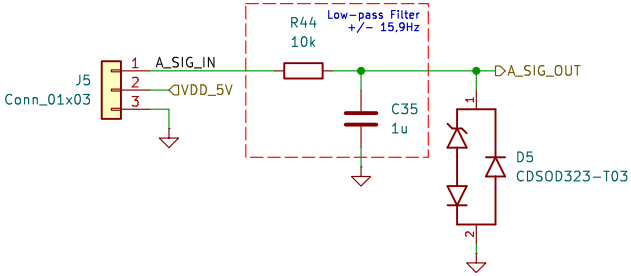

Sheet: /sensor/
File: sensor.kicad_sch

Title:

Size: A4	Date:	Rev:
KiCad E.D.A. 9.0.2		Id: 9/10

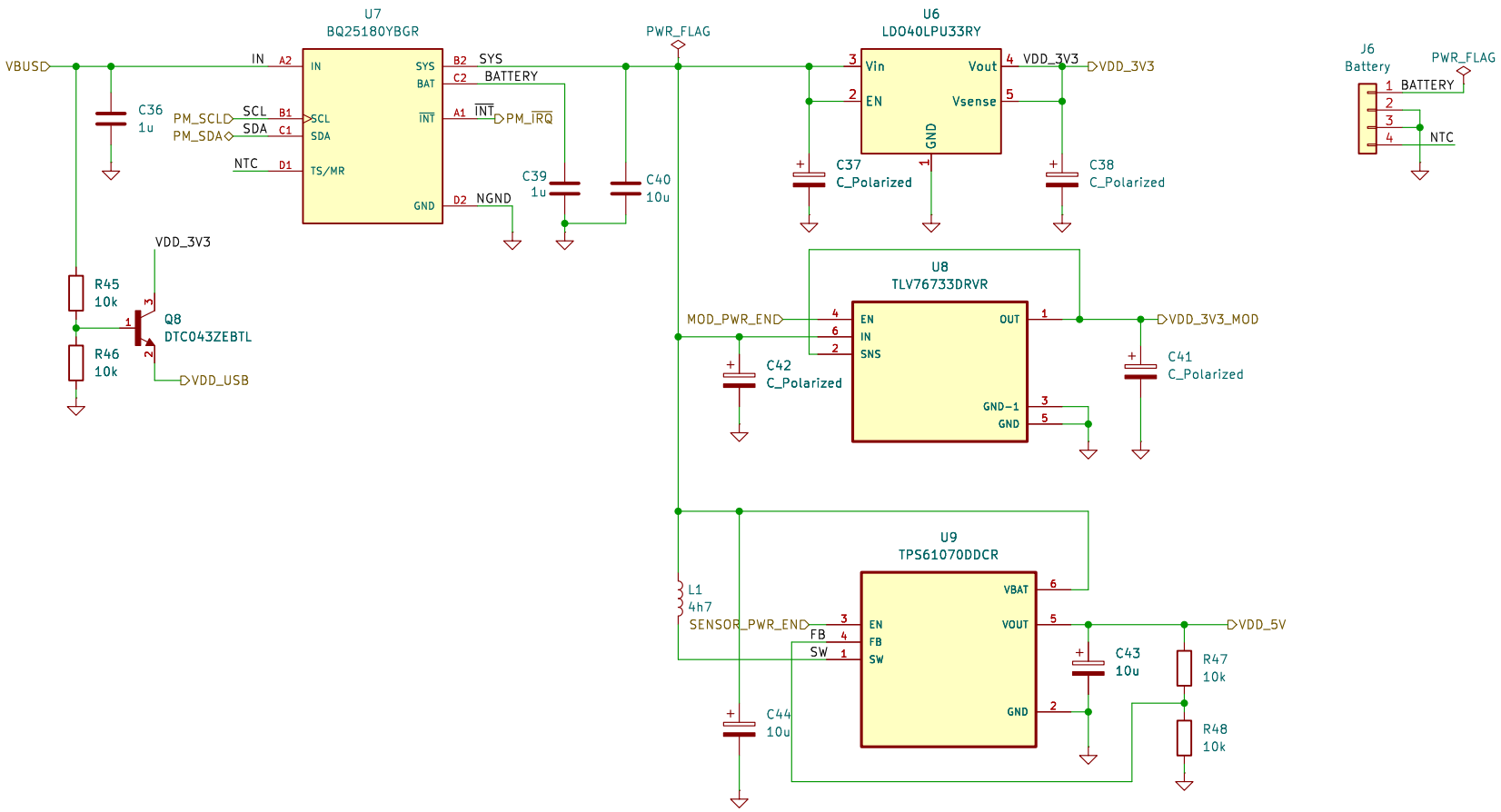

Sheet: /power_supply/
File: power_supply.kicad_sch

Title:

Size: A4	Date:	**Rev:**
KiCad E.D.A. 9.0.2		Id: 10/10

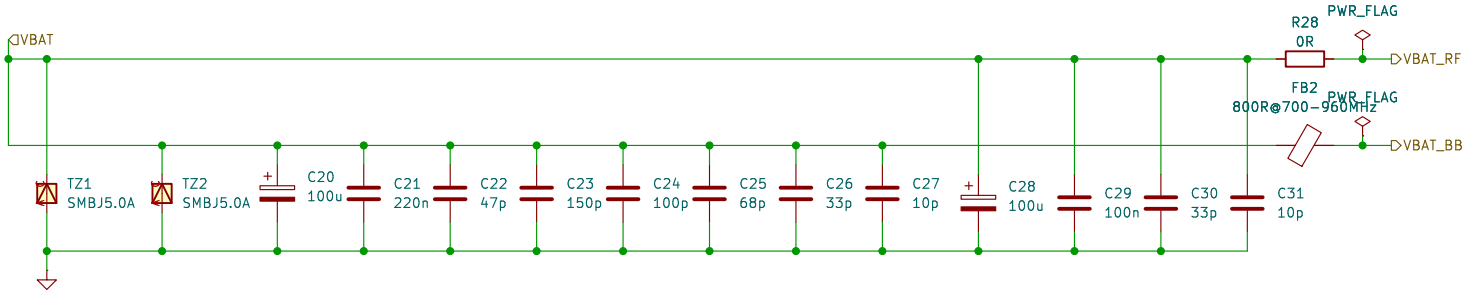

Sheet: /modem/v_batt/
File: v_batt.kicad_sch

Title:

Size: A4	Date:	**Rev:**
KiCad E.D.A. 9.0.2		Id: 4/10

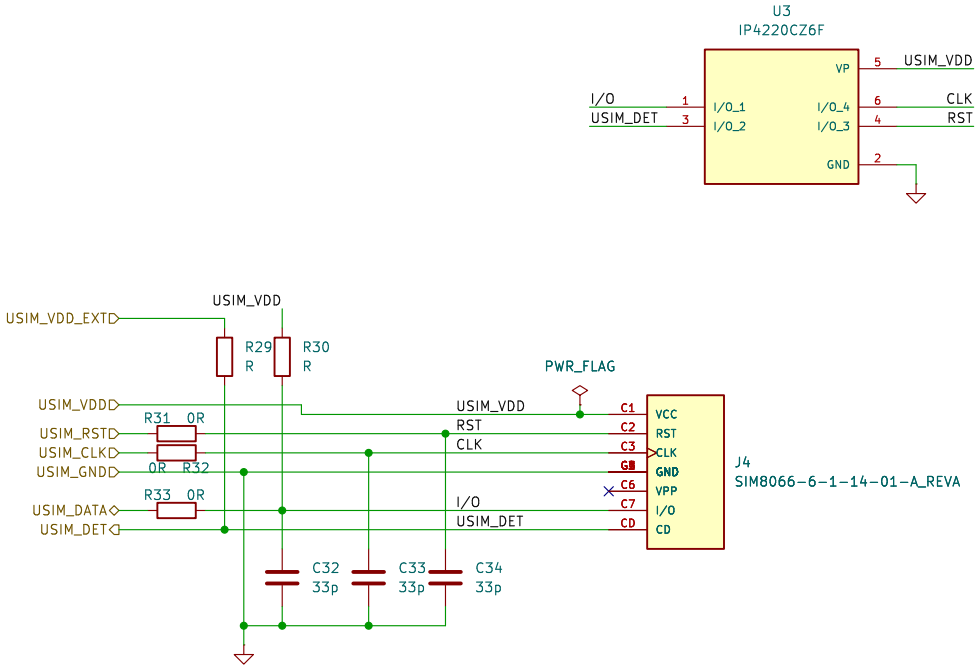

Sheet: /modem/usim/
File: usim.kicad_sch

Title:

Size: A4	Date:	Rev:
KiCad E.D.A. 9.0.2		Id: 5/10

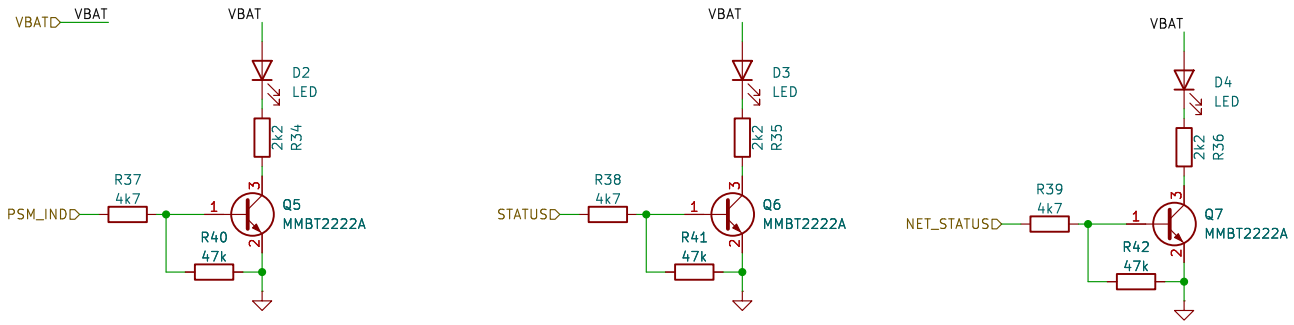

Sheet: /modem/indicator/
File: indicator.kicad_sch

Title:

Size: A4	Date:	**Rev:**
KiCad E.D.A. 9.0.2		Id: 6/10