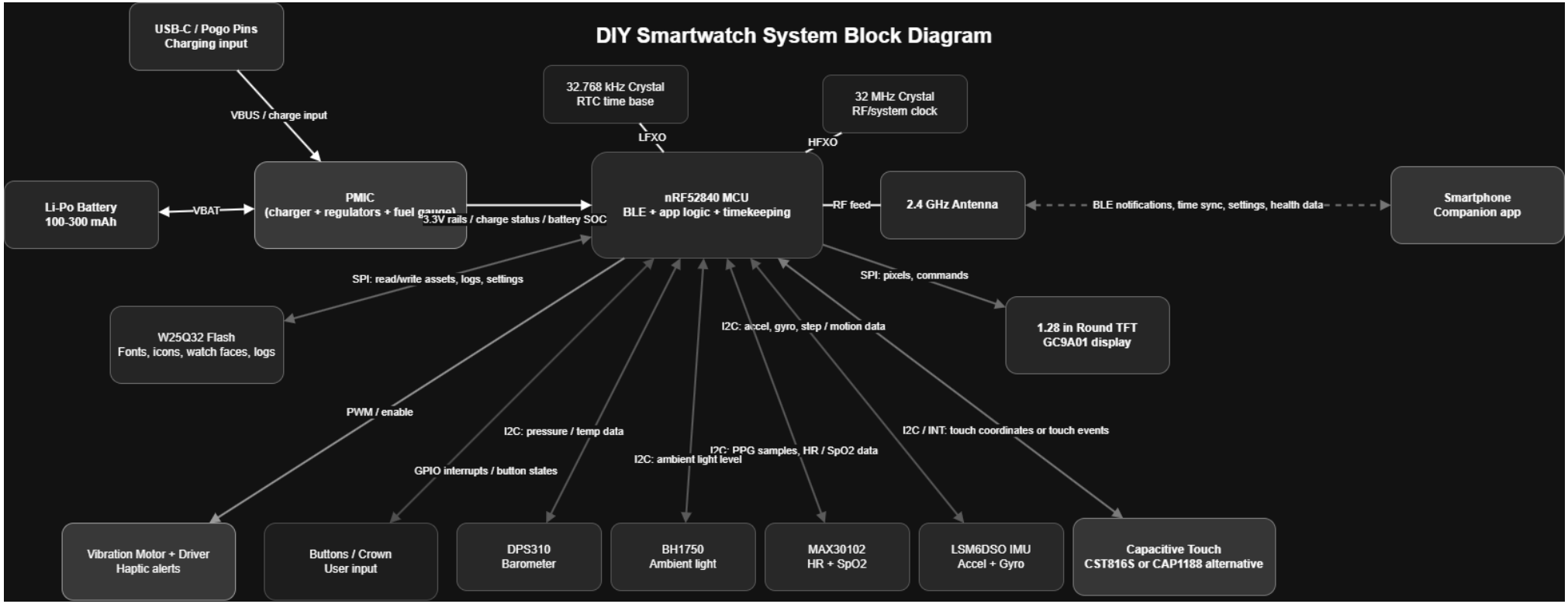

Sheet: /
File: Smart_Watch.kicad_sch

Title:

Size: A4	Date:	Rev:
KiCad E.D.A. 9.0.1		Id: 1/5

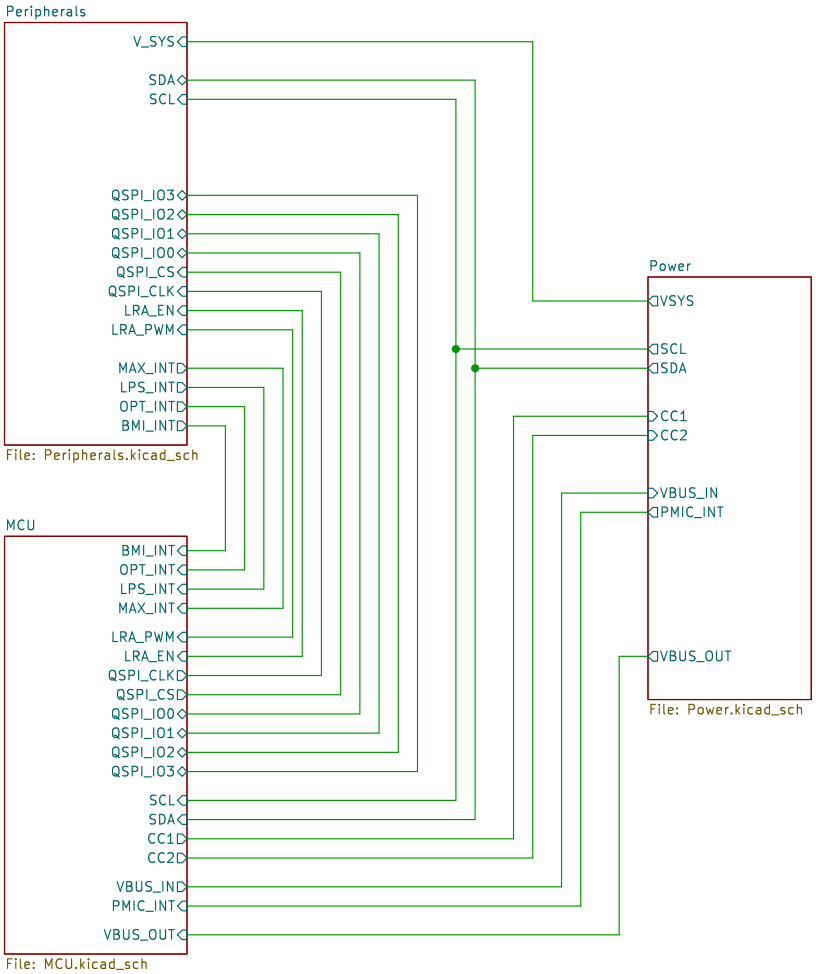

Sheet: /Architecture/
File: Architecture.kicad_sch

Title:

Size: A4	Date:	**Rev:**
KiCad E.D.A. 9.0.1		Id: 2/5

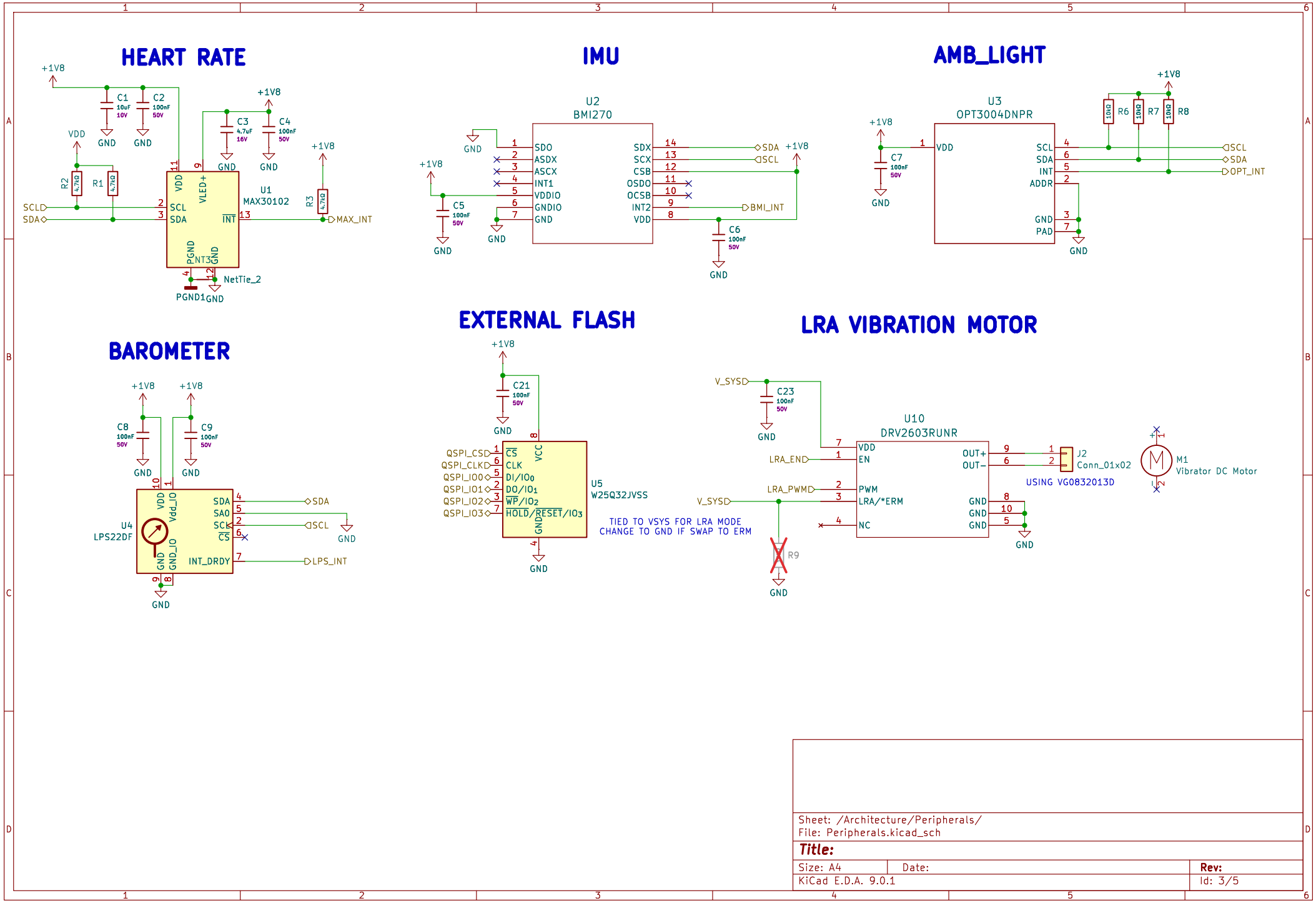

Sheet: /Architecture/Peripherals/
File: Peripherals.kicad_sch

Title:

Size: A4	Date:	Rev:
KiCad E.D.A. 9.0.1		Id: 3/5

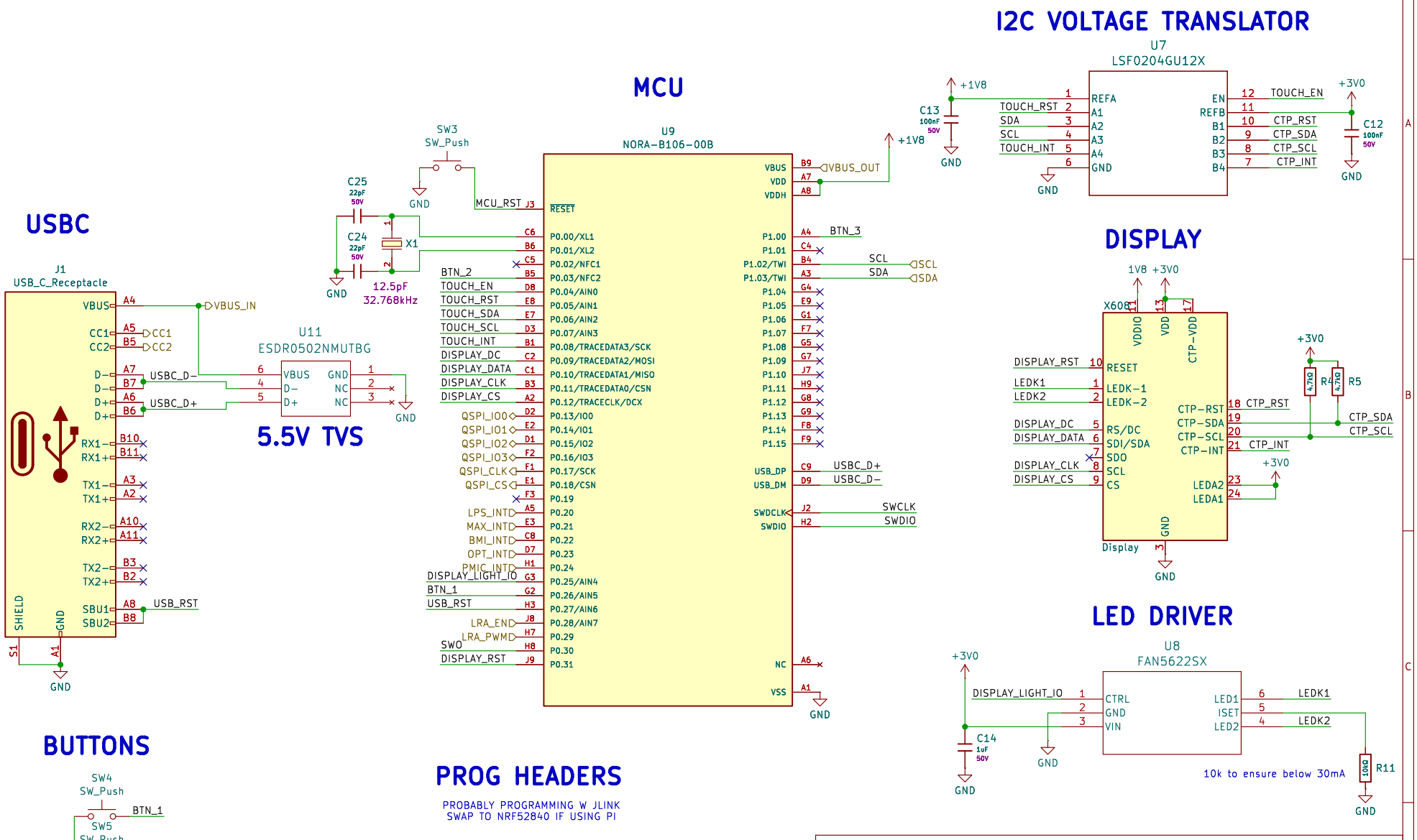

Sheet: /Architecture/MCU/
File: MCU.kicad_sch

Title:

Size: A4	Date:	Rev:
KiCad E.D.A. 9.0.1		Id: 4/5

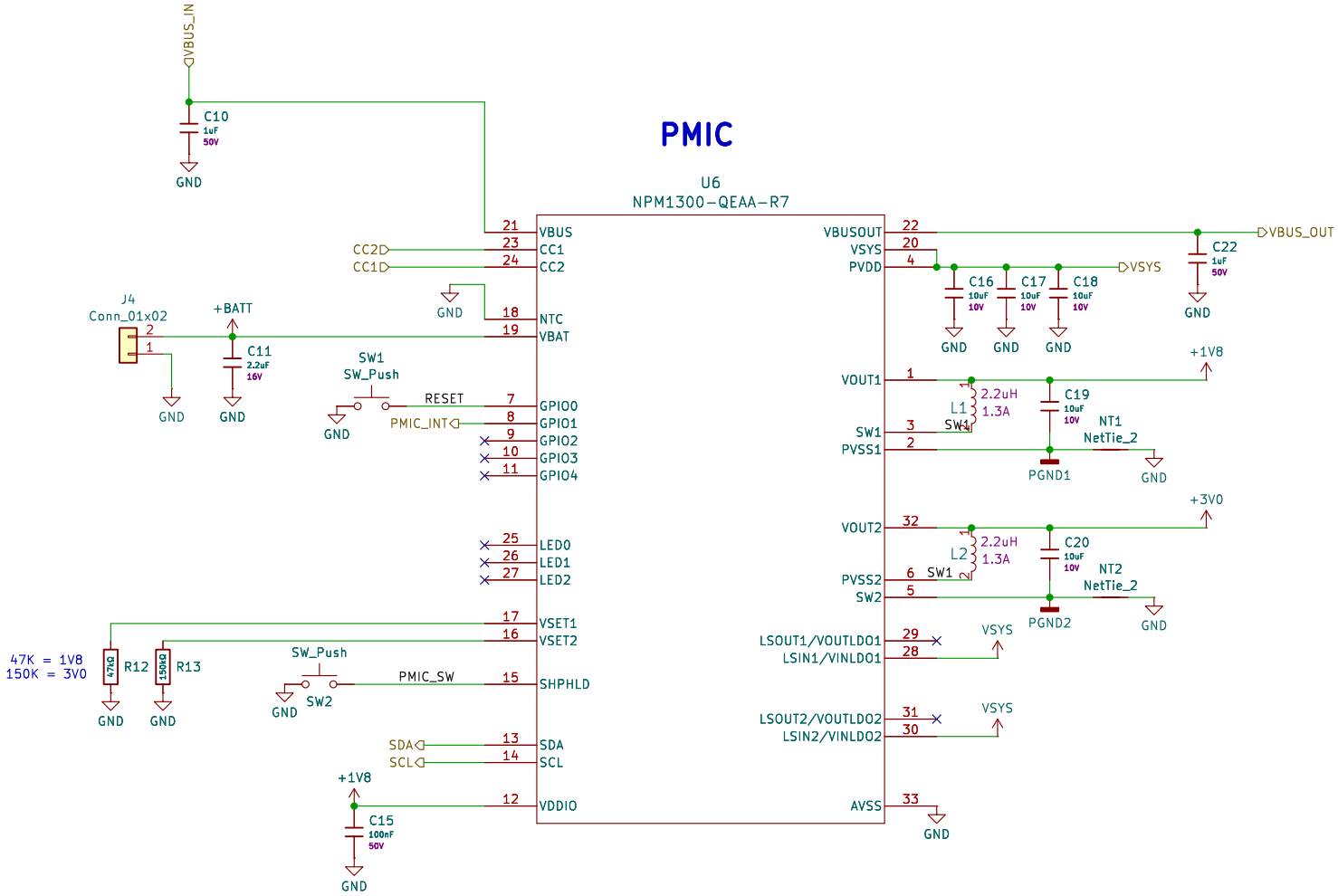

Sheet: /Architecture/Power/
File: Power.kicad_sch

Title:

Size: A4	Date:	Rev:
KiCad E.D.A. 9.0.1		Id: 5/5