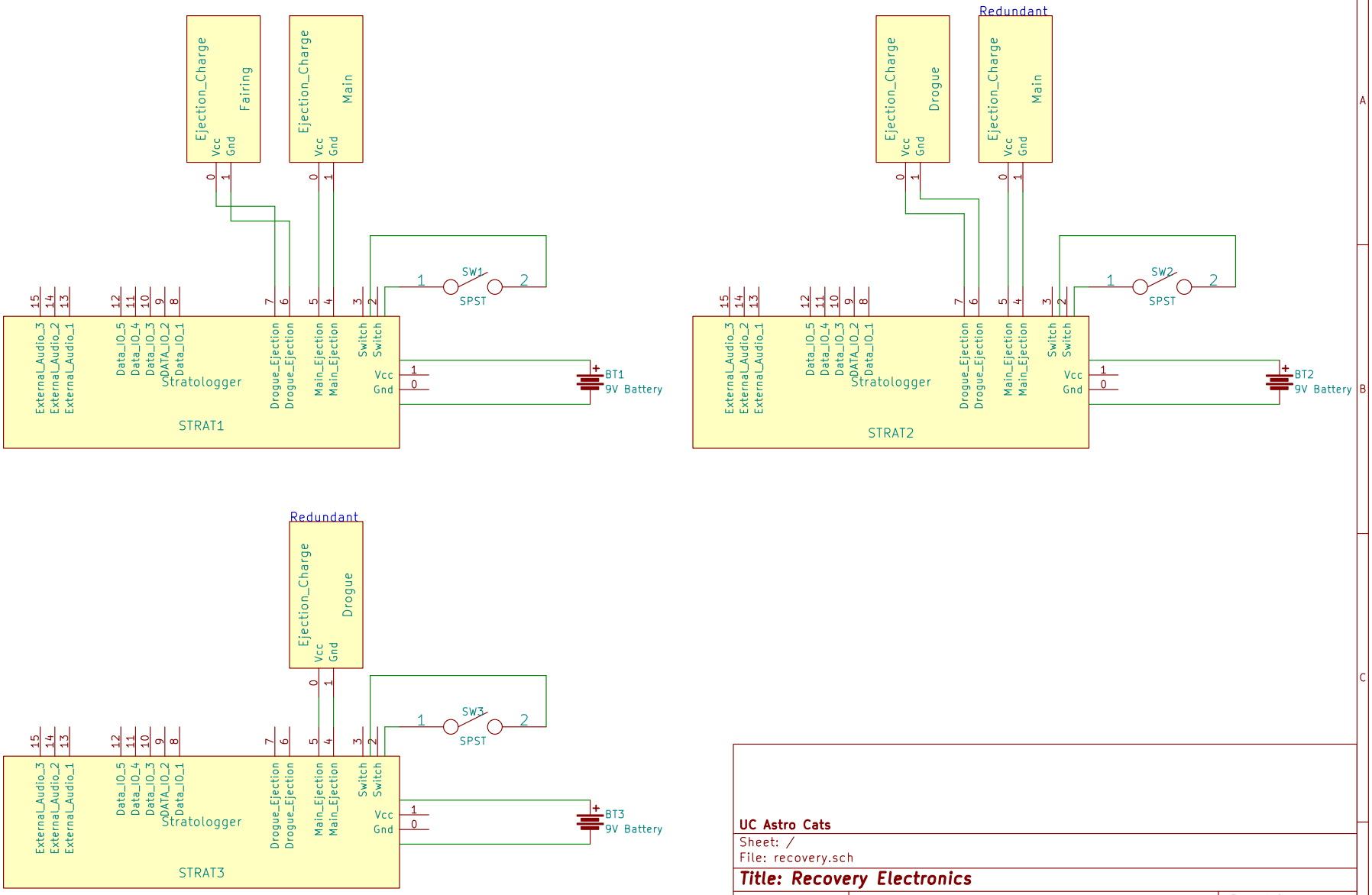

UC Astro Cats

Sheet: /

File: recovery.sch

Title: Recovery Electronics

Size: User	Date: 2015-11-01	**Rev: 1.0**
KiCad E.D.A. kicad (2015-09-05 BZR 6156, Git 0a56afe)-product		Id: 1/1