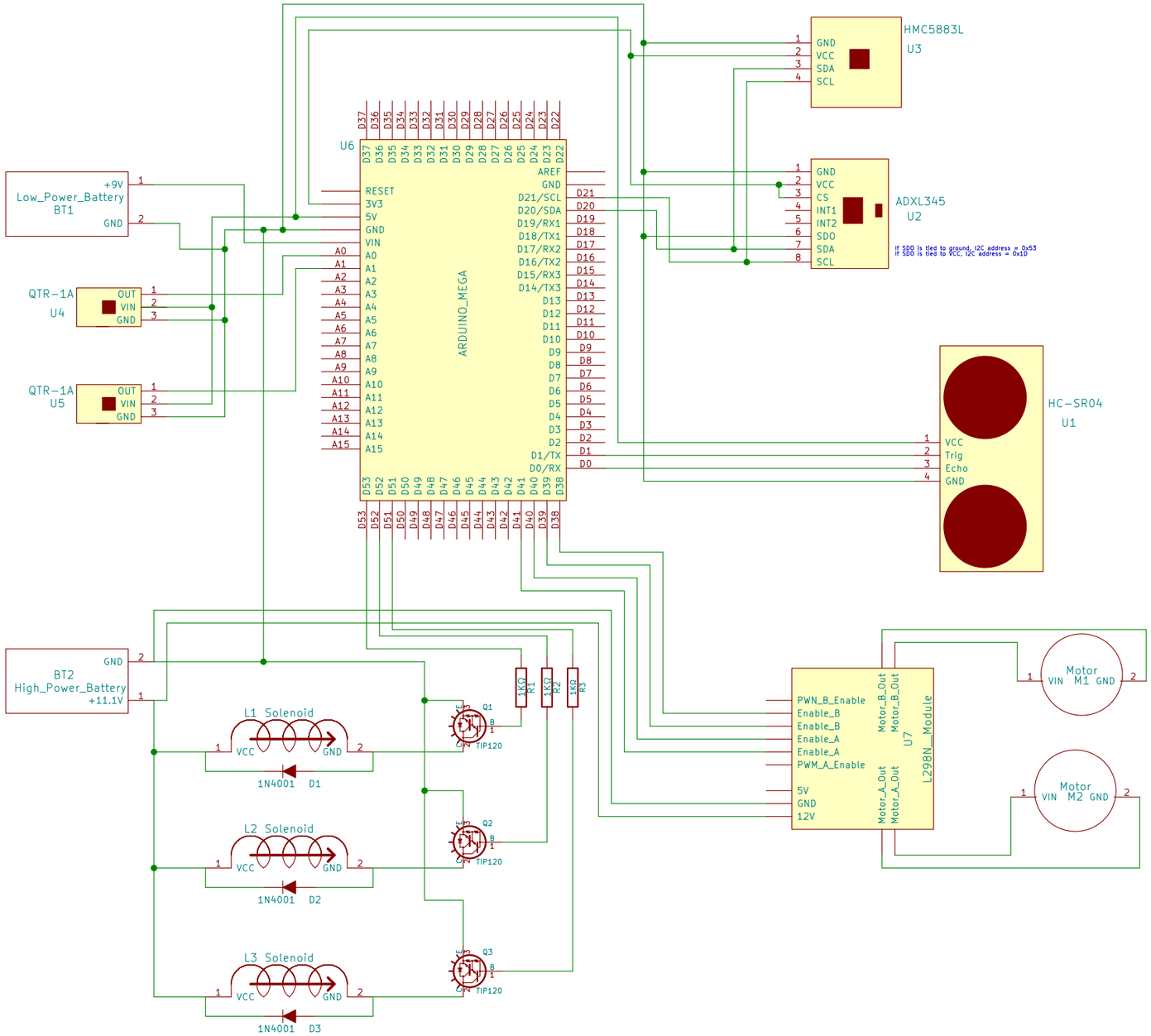

UC StratoCats

Sheet: /

File: rover.sch

Title: StratoCats 2015 Rover Competition Electrical Schematic

Size: A3	Date: Wednesday, January 21, 2015	**Rev: 1**
KiCad E.D.A. kicad (2014-12-04 BZR 5312)-product		Id: 1/1