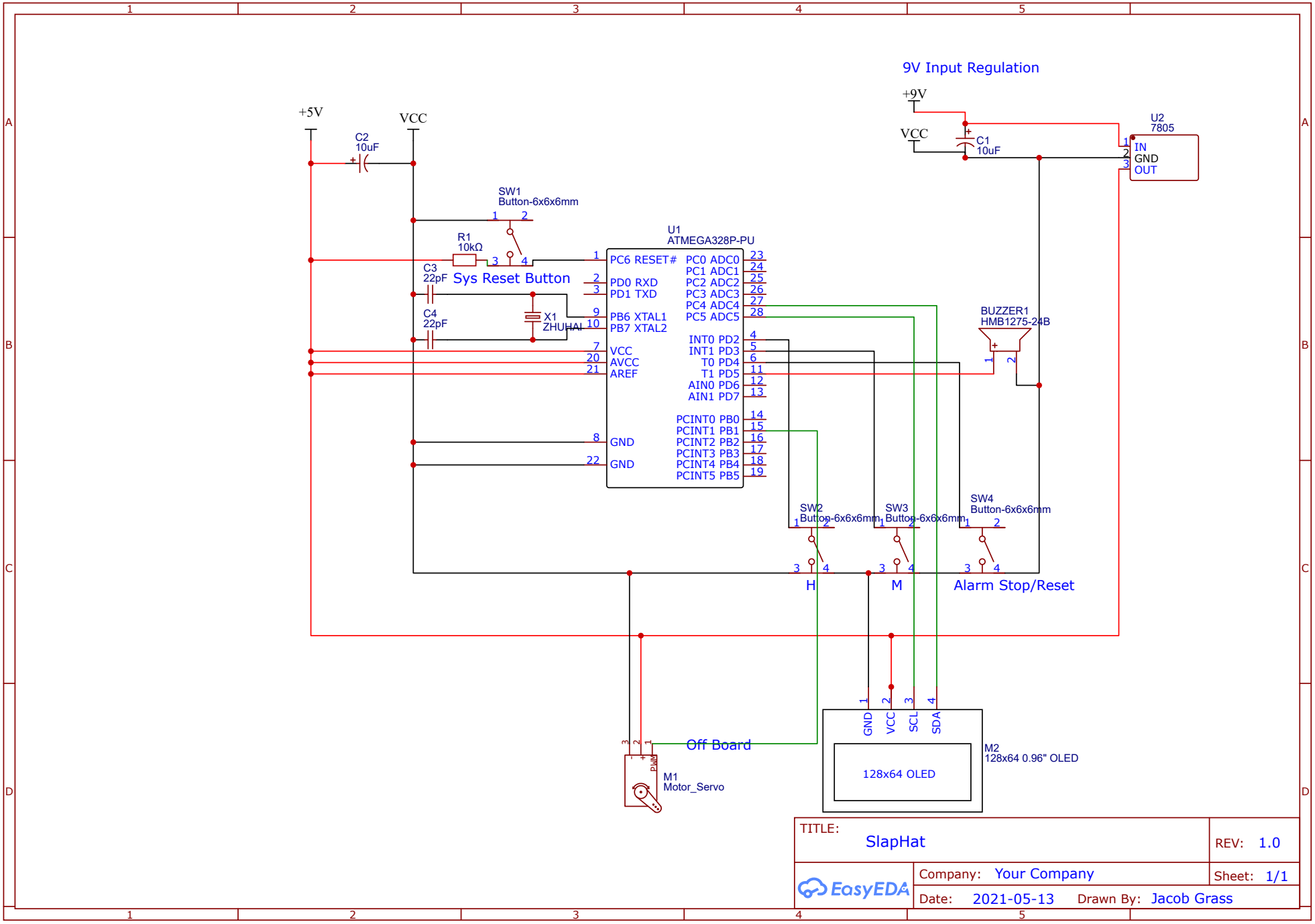

TITLE: SlapHat		REV: 1.0
EasyEDA	Company: Your Company	Sheet: 1/1
	Date: 2021-05-13 Drawn By: Jacob Grass	