Dynamixel LDO

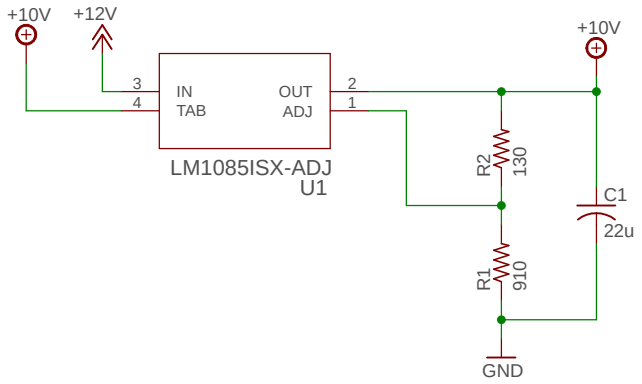

Power Input

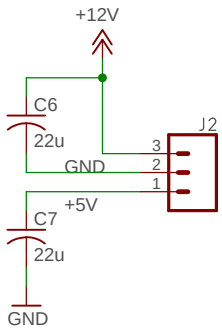

Microcontroller Programming Port

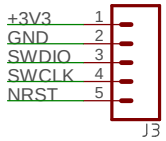

Dynamixel and Level Shifting

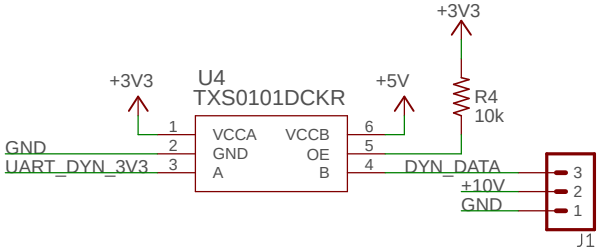

Indicator LEDs

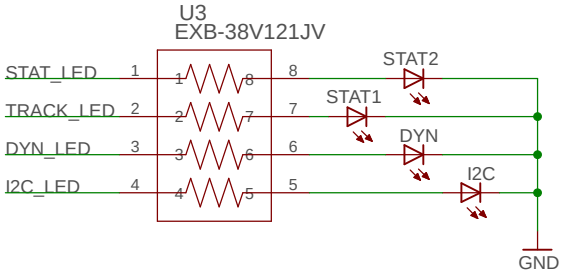

Raspberry PI Header

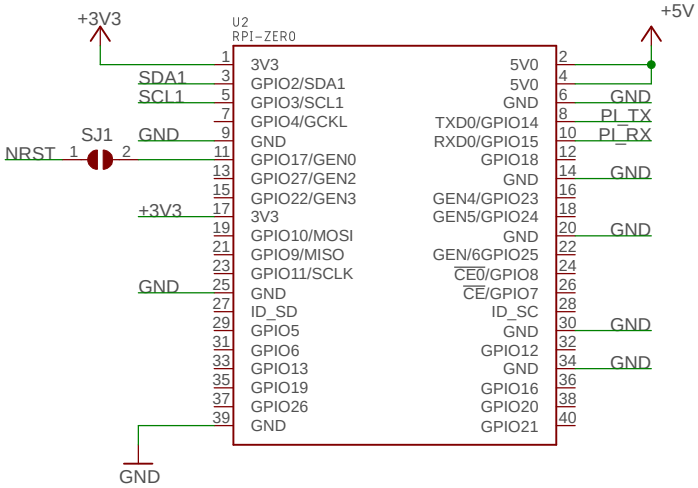

Microcontroller

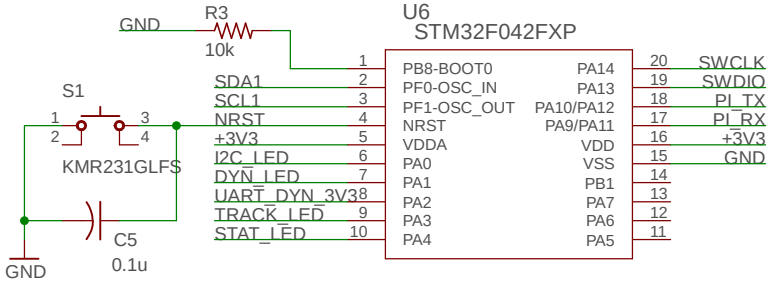

TITLE: localization-daughter-board	
Document Number:	REV:
Date: 1/25/2018 11:00 PM	Sheet: 1/1