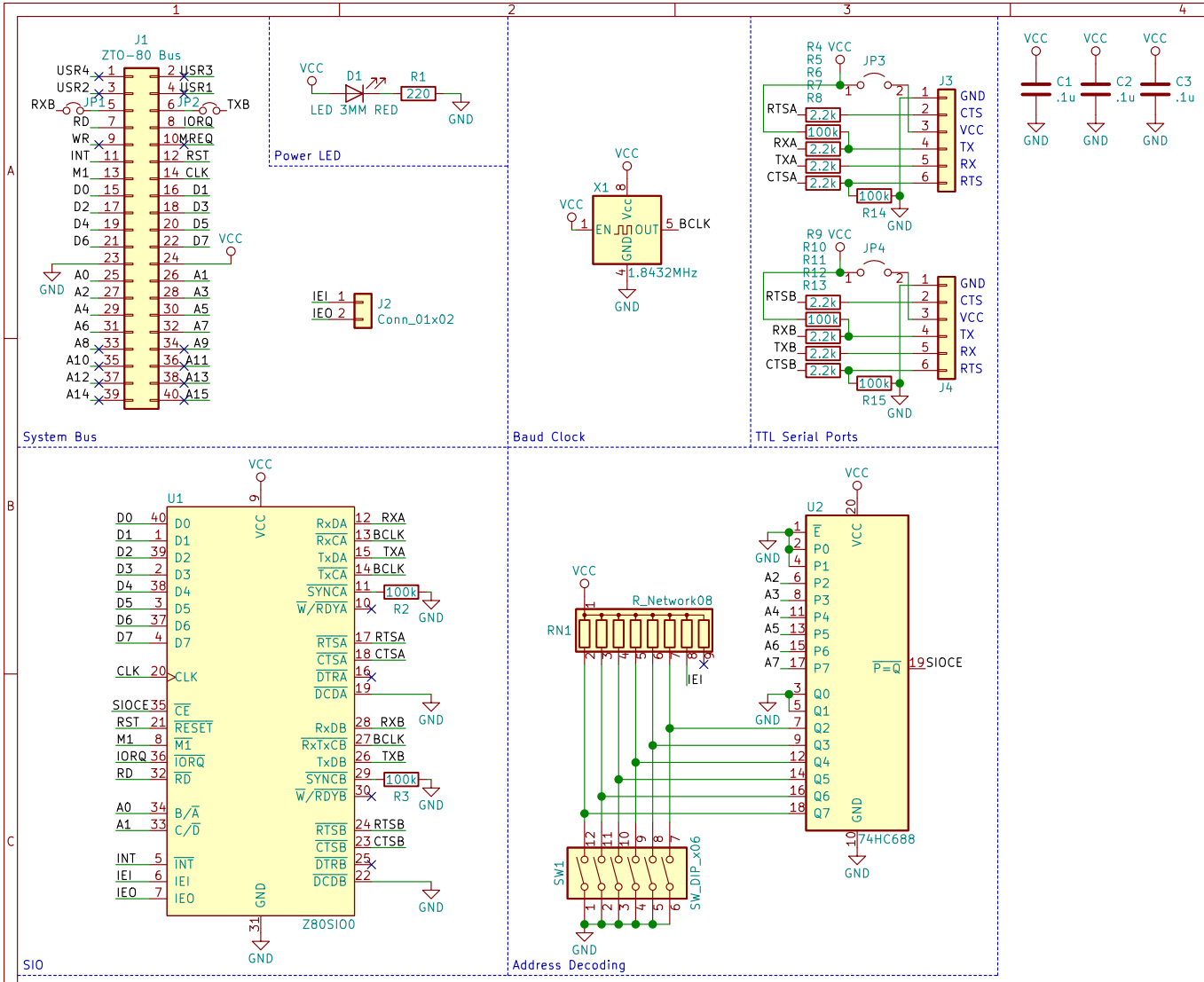

PWR_FLAG PWR_FLAG
VCC GND

Jacob Hahn	
Sheet: /	
File: ZTO-80 SIO.sch	
Title: ZTO-80 SIO	
Size: A4 Date: 2020-08-16	**Rev: 1.1**
KiCad E.D.A. eeschema (5.1.5)-3	Id: 1/1