ARTICLE IN PRESS
Computers and Mathematics with Applications ▮ (▮▮▮▮) ▮▮▮–▮▮▮

Contents lists available at ScienceDirect

Computers and Mathematics with Applications

journal homepage: www.elsevier.com/locate/camwa

Vector-potential finite-element formulations for two-dimensional resistive magnetohydrodynamics

James H. Adler [a], Yunhui He [b], Xiaozhe Hu [a], Scott P. MacLachlan [b,*]

[a] Department of Mathematics, Tufts University, Bromfield-Pearson Building, 503 Boston Avenue, Medford, MA 02155, USA
[b] Department of Mathematics and Statistics, Memorial University of Newfoundland, St. John's, NL A1C 5S7, Canada

ARTICLE INFO

Article history:
Received 29 September 2017
Received in revised form 25 September 2018
Accepted 29 September 2018
Available online xxxx

Keywords:
Magnetohydrodynamics
Mixed finite-element method
Newton's method

ABSTRACT

Vector-potential formulations are attractive for electromagnetic problems in two dimensions, since they reduce both the number and complexity of equations, particularly in coupled systems, such as magnetohydrodynamics (MHD). In this paper, we consider the finite-element formulation of a vector-potential model of two-dimensional resistive MHD. Existence and uniqueness are considered separately for the continuum nonlinear equations and the discretized and linearized form that arises from Newton's method applied to a modified system. Under some conditions, we prove that the solutions of the original and modified weak forms are the same, allowing us to prove convergence of the discretization and well-posedness of the nonlinear iteration near a solution.

© 2018 Elsevier Ltd. All rights reserved.

1. Introduction

Magnetohydrodynamics (MHD) models the flow of a charged fluid, or plasma, in the presence of electromagnetic fields. There are many formulations of MHD, depending on the domain and physical parameters considered. This includes assumptions associated with the coupling between the electric field, current density, and Ohm's law, leading to formulations such as ideal, resistive, and Hall MHD [1]. In this paper, we use a single incompressible fluid model, treating ions and electrons together, along with a resistive formulation. The resulting visco-resistive model couples the Navier–Stokes equations with Maxwell's equations, forming a nonlinear system of partial differential equations (PDEs). Moreover, we focus on time-independent solutions, with our primary focus on existence and uniqueness of solutions to the nonlinear and linearized systems of equations.

The equations of stationary, incompressible single fluid MHD posed in three dimensions are considered in (for example) [2,3]. Under some conditions on the data, the existence and uniqueness of solutions to weak formulations of the equations is known both in the continuum and for certain discretizations. The focus of this paper is on MHD in two dimensions (2D). Here, a vector potential formulation was used in [4,5]. Vector potential formulations are attractive for electromagnetic problems with two-dimensional dynamics, since they substantially reduce the complexity of the resulting equations, by trading vector for scalar unknowns, and the curl terms that arise in Maxwell's equations for standard gradient and diffusion operators. Despite this attractiveness, there is a scarcity of analysis for multiphysics systems using vector potential formulations, for both the continuum and discretized models. In this paper, we demonstrate that standard analysis techniques can be extended from three-dimensional MHD [2,3] to the two-dimensional discretizations considered in [4,5], although some complications arise that can only be addressed (to our knowledge) by making more restrictive assumptions.

* Corresponding author.
E-mail address: smaclachlan@mun.ca (S.P. MacLachlan).

https://doi.org/10.1016/j.camwa.2018.09.051
0898-1221/© 2018 Elsevier Ltd. All rights reserved.

Please cite this article in press as: J.H. Adler, et al., Vector-potential finite-element formulations for two-dimensional resistive magnetohydrodynamics, Computers and Mathematics with Applications (2018), https://doi.org/10.1016/j.camwa.2018.09.051.

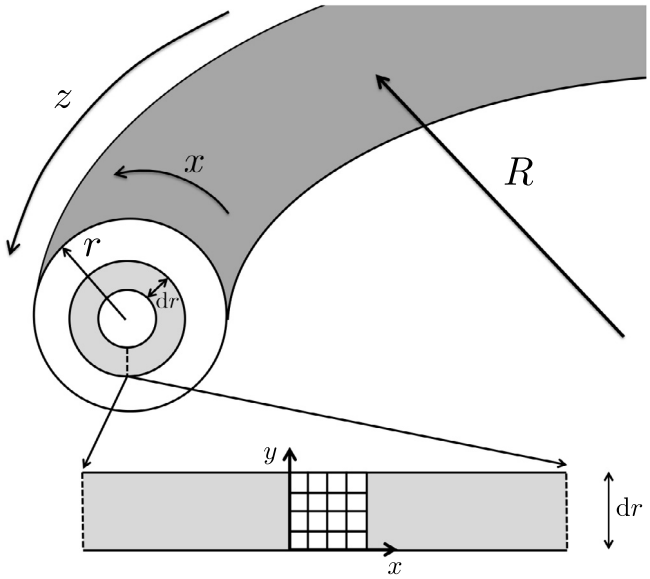

Fig. 1. Cross-sectional view of large aspect-ratio tokamak geometry, with major radius, R, and minor radius, r, satisfying $R \gg r$. A cross-section of thickness dr can be unfolded to create a Cartesian grid as pictured.

Two-dimensional models of MHD arise when considering magnetically confined plasmas, such as in a large aspect-ratio tokamak reactor, as illustrated in Fig. 1. In this setting, the magnetic field along the toroidal direction (denoted by z) is very large in order to contain the plasma. Consequently, the resulting dynamics decouple into a two-dimensional problem posed over the poloidal cross-section. While such a configuration can be accurately studied using full three-dimensional models, the computational cost of such models is substantially more than their two-dimensional counterparts, thus motivating the many numerical studies of MHD in two dimensions.

While numerical results using the vector potential formulation already exist in the literature, [4,5] focus primarily on linear algebraic aspects of the solution of the resulting linearized systems of equations, leaving open the questions of existence and uniqueness of solutions. In this paper, we focus on the theoretical analysis of both the continuum model and its discretization, applying standard theoretical tools for the existence and uniqueness of solutions at both the continuum and discrete levels. For the discretization, this is complicated when considering a nonconforming discretization, as was used in [4,5]. Nonetheless, under moderate conditions, we prove that Newton's method yields well-posed linearizations and converges to the solution of the weak formulation.

An outline of this paper is as follows. In Section 2, we detail the vector-potential formulation for the MHD problem in 2D and, under standard conditions, we prove the existence and uniqueness of the continuum solution. In Section 3, we introduce a modified, "uncurled", formulation for the MHD problem and present the analysis of the discretized problem using a mixed finite-element method. In Section 4, we consider Newton's method for solving the nonlinear system. Numerical results supporting the theory are presented in Section 5. Finally, some concluding remarks are given in Section 6.

In what follows, the letter C (with no subscript) denotes a generic positive constant which may be different depending on the context. When used with a subscript, the constant is the same in all instances. For a Lipschitz domain $\Omega \subset \mathbb{R}^2$, denote by L^p, $1 \le p \le \infty$, the Lebesgue space of p-integrable functions, endowed with the norm $\|\cdot\|_{0,p}$. Denote the standard Euclidean norm as $|\cdot|$, the classical $L^2(\Omega)$ inner product and norm as $\langle\cdot,\cdot\rangle_0$ and $\|\cdot\|_0$, respectively, and $\langle f, g\rangle = \int_\Omega fg\,\mathrm{dX}$, where $fg \in L^1(\Omega)$. The standard L^2-based Sobolev space with integer or fractional exponent s is denoted by $H^s(\Omega)$. We write $\|\cdot\|_s$ for its norm.

For convenience, we introduce the spaces

$$\mathbf{J} := \left(H_0^1(\Omega)\right)^2 \cap H(\mathrm{div}^0;\Omega), \quad \mathbf{W} := \left(H_0^1(\Omega)\right)^2, \quad \mathbf{Q} := L_0^2(\Omega),$$

$$\mathbf{X} := H_\tau^1(\Omega) \cap L_0^2(\Omega), \quad \widetilde{\mathbf{X}} := H^1(\Omega) \cap L_0^2(\Omega), \quad \mathbf{X}_0 := H_\gamma^1(\Omega), \quad \widetilde{\mathbf{X}}_0 := H_0^1(\Omega),$$

endowed with natural Sobolev norms. Here, in addition to the standard (scalar and vector) spaces $H^1(\Omega)$ and $H_0^1(\Omega)$, we take

$$H(\mathrm{div}^0;\Omega) := \left\{\vec{v}\,\middle|\,\vec{v} \in \left(L^2(\Omega)\right)^2,\ \nabla\cdot\vec{v} = 0 \text{ in } \Omega\right\}, \quad L_0^2(\Omega) := \left\{q\,\middle|\,q \in L^2(\Omega), \int_\Omega q\,\mathrm{dX} = 0\right\},$$

$$H_\tau^1(\Omega) := \left\{\phi\,\middle|\,\phi \in H^1(\Omega), \Delta\phi \in L^2(\Omega), \text{ and } \frac{\partial\phi}{\partial\vec{n}}|_{\partial\Omega} = 0\right\}, \quad H_\gamma^1(\Omega) := \left\{\phi|\phi \in H_0^1(\Omega), \text{ and } \Delta\phi \in L^2(\Omega)\right\},$$

and define the norm in $\mathbf{X}$ ($\mathbf{X}_0$) as

$$\|\phi\|_{\mathbf{X}} := \left(\|\phi\|_1^2 + \|\Delta\phi\|_0^2\right)^{\frac{1}{2}}.$$

2. Steady-state visco-resistive MHD

In this paper, we consider cylindrical three-dimensional domains, $\hat{\Omega} = \Omega \times [z_0, z_1]$, where $\Omega \subset \mathbb{R}^2$ is Lipschitz, bounded and connected, which are coupled with a large incident magnetic field in the z-direction. To begin, we consider the one-fluid visco-resistive MHD model, where the dependent variables are the fluid velocity $\vec{u}$, the hydrodynamic pressure p, and the magnetic field $\vec{B}$. The equations are

$$\frac{\partial \vec{u}}{\partial t} + (\vec{u}\cdot\nabla)\vec{u} - \nabla\cdot(T + T_M) + \nabla p = \vec{F}, \tag{1}$$

$$\frac{\partial \vec{B}}{\partial t} - \nabla\times(\vec{u}\times\vec{B}) + \nabla\times\left(\frac{1}{Re_m}\nabla\times\vec{B}\right) = \vec{G}, \tag{2}$$

$$\nabla\cdot\vec{u} = 0, \tag{3}$$

$$\nabla\cdot\vec{B} = 0, \tag{4}$$

where $\vec{G} = -\nabla\times\vec{E}_{\text{stat}}$, and $\vec{E}_{\text{stat}}$ is the static component of the electric field. The Newtonian and magnetic stress tensors are

$$T = \frac{1}{2Re}\left[\nabla\vec{u} + \nabla\vec{u}^T\right], \text{ and } T_M = \vec{B}\otimes\vec{B} - \frac{1}{2}|\vec{B}|^2 I,$$

respectively. We define the tensor $\vec{B}\otimes\vec{B}$ component-wise as $(\vec{B}\otimes\vec{B})_{i,j} = B_iB_j$ and $\vec{F} = (\vec{f}, 0) \in \left(H^{-1}(\hat{\Omega})\right)^3$ for $\vec{f} \in \left(H^{-1}(\Omega)\right)^2$, $\vec{G} \in \left(L^2(\hat{\Omega})\right)^3$. Additionally, we define the standard nondimensional Reynolds number, Re, and magnetic Reynolds number, Re_m:

$$Re = \frac{\rho UL}{\nu}, \qquad Re_m = \frac{\mu_0 UL}{\eta},$$

for a characteristic velocity, U, and a characteristic length scale, L. The physical parameters, all assumed constant, are the fluid viscosity ν, the fluid density ρ, the magnetic permeability of free space μ_0, and the magnetic resistivity η.

Assuming that the domain is coupled with a large incident magnetic field in the z-direction, the resulting dynamics decouple into a two-dimensional problem over Ω with simple behaviour in the z-direction. For the tokamak pictured in Fig. 1, this is equivalent to assuming both a large incident magnetic field in the toroidal direction as well as a large aspect-ratio, so that the curvature of the tokamak is negligible. Considering the resulting plasma behaviour over Ω (the poloidal cross-section of the tokamak), and assuming no variation in the z- (toroidal-) direction, we take $\vec{B} = (B_1(x,y), B_2(x,y), B_0)$ and $\vec{u} = (u_1(x,y), u_2(x,y), u_0)$. Then, we complete the above system with homogeneous boundary conditions on the velocity, $\vec{u} = \vec{0}$ on $\partial\Omega$, and either *perfect conductor* or *perfect insulator* boundary conditions on $\vec{B}$, $\vec{B}\cdot\vec{n} = 0$ or $\vec{B}\times\vec{n} = \vec{0}$ on $\partial\Omega$, respectively, where $\vec{n}$ denotes the outward normal vector on $\partial\Omega$.

Noting that $\nabla\cdot\vec{B} = 0$, we must have $\frac{\partial B_1}{\partial x} + \frac{\partial B_2}{\partial y} = 0$, which allows us to write $\vec{B} = \nabla\times\vec{A} + (0, 0, B_0)$, where $\vec{A} = (0, 0, A(x,y))$. Consequently, we rewrite Eqs. (1)–(4) in terms of the vector potential, $\vec{A}$. Considering the continuum problem (1)–(4), direct calculation shows that B_0 and u_0 do not appear in the resulting equations for the other components of $\vec{B}$ and $\vec{u}$ and, so, we ignore them (by treating them as zero) in what follows.

2.1. Weak formulation

We now introduce the weak formulation of (1)–(4) for the two-dimensional domain Ω. Writing $\vec{B} = \nabla\times\vec{A}$ for vector potential, $\vec{A}$, gives $\nabla\cdot\vec{B} = 0$ and Eq. (4) is automatically satisfied. Thus, we no longer include it in the formulation.

If $\vec{B} \in H^1(\hat{\Omega})$, then a standard vector calculus identity gives

$$\nabla\cdot\left(\vec{B}\otimes\vec{B} - \frac{1}{2}|\vec{B}|^2 I\right) = (\nabla\times\vec{B})\times\vec{B} + (\nabla\cdot\vec{B})\cdot\vec{B},$$

while the same equality holds in a weak sense (sufficient for what follows) if $\vec{B} \in \left(L^4(\hat{\Omega})\right)^3$, $\nabla\cdot\vec{B} \in \left(L^2(\hat{\Omega})\right)^3$, and $\nabla\times\vec{B} \in \left(L^2(\hat{\Omega})\right)^3$. If, additionally, $\nabla\cdot\vec{B} = 0$ pointwise, then

$$\nabla\cdot\left(\vec{B}\otimes\vec{B} - \frac{1}{2}|\vec{B}|^2 I\right) = (\nabla\times\vec{B})\times\vec{B}.$$

When $A \in \mathbf{X}$, taking $\vec{B} = (\frac{\partial A}{\partial y}, -\frac{\partial A}{\partial x}, 0)$ ensures that $\vec{B} \in \left(L^4(\hat{\Omega})\right)^3$, $\nabla \cdot \vec{B} = 0$ pointwise, and $\nabla \times \vec{B} \in \left(L^2(\hat{\Omega})\right)^3$, giving

$$\begin{aligned}\int_{\hat{\Omega}} \nabla \cdot (\vec{B} \otimes \vec{B} - \frac{1}{2}|\vec{B}|^2 I) \cdot \vec{V} \mathrm{d}\hat{\mathrm{X}} &= \int_{\hat{\Omega}} (\nabla \times \vec{B}) \times \vec{B} \cdot \vec{V} \mathrm{d}\hat{\mathrm{X}} \\ &= \int_{\hat{\Omega}} (-\Delta A \cdot \frac{\partial A}{\partial x}, -\Delta A \cdot \frac{\partial A}{\partial y}, 0) \cdot \vec{V} \mathrm{d}\hat{\mathrm{X}} \\ &= -(z_1 - z_0) \int_{\Omega} \Delta A \cdot (\nabla A \cdot \vec{v}) \, \mathrm{d}\mathrm{X}, \end{aligned} \tag{5}$$

for any $\vec{V} = (\vec{v}, v_3) \in \left(H^1(\hat{\Omega})\right)^3$, with $\vec{v} \in \left(H^1(\Omega)\right)^2$.

Furthermore,

$$\begin{aligned} T_M &= \vec{B} \otimes \vec{B} - \frac{1}{2}\|\vec{B}\|^2 I \\ &= \begin{pmatrix} \frac{\partial A_z}{\partial y} \\ -\frac{\partial A_z}{\partial x} \end{pmatrix} \cdot \begin{pmatrix} \frac{\partial A_z}{\partial y} & -\frac{\partial A_z}{\partial x} \end{pmatrix} - \frac{1}{2}\left[\left(\frac{\partial A_z}{\partial y}\right)^2 + \left(\frac{\partial A_z}{\partial x}\right)^2\right] I \\ &= \begin{pmatrix} \frac{1}{2}\left[\left(\frac{\partial A_z}{\partial y}\right)^2 - \left(\frac{\partial A_z}{\partial x}\right)^2\right] & -\frac{\partial A_z}{\partial x} \cdot \frac{\partial A_z}{\partial y} \\ -\frac{\partial A_z}{\partial x} \cdot \frac{\partial A_z}{\partial y} & \frac{1}{2}\left[\left(\frac{\partial A_z}{\partial x}\right)^2 - \left(\frac{\partial A_z}{\partial y}\right)^2\right] \end{pmatrix}. \end{aligned}$$

Taking $\vec{C} = \nabla \times (0, 0, \varphi)$ for $\varphi \in \mathbf{X}$, then we can rewrite the weak formulation of (2), discarding the time derivative,

$$\int_{\hat{\Omega}} \left[-\nabla \times (\vec{u} \times \vec{B}) \cdot \vec{C} + \nabla \times (Re_m^{-1} \nabla \times \vec{B}) \cdot \vec{C}\right] \mathrm{d}\hat{\mathrm{X}} = \int_{\hat{\Omega}} \vec{G} \cdot \vec{C} \mathrm{d}\hat{\mathrm{X}},$$

as

$$\int_{\Omega} -(u_1, u_2) \cdot \nabla A \cdot \Delta\varphi \, \mathrm{d}\mathrm{X} + \int_{\Omega} Re_m^{-1} \Delta A \cdot \Delta\varphi \, \mathrm{d}\mathrm{X} = \int_{\Omega} E^0 \cdot \Delta\varphi \mathrm{d}\mathrm{X},$$

where E^0 is the z-component of the electrostatic part, $\vec{E}_{\text{stat}}$, and we choose E^0 so that $\int_{\Omega} E^0 \mathrm{d}\mathrm{X} = 0$. We drop the common scaling of $(z_1 - z_0)$ when switching from integrals over $\hat{\Omega}$ to those over Ω. In the following, we denote $\vec{u} = (u_1(x, y), u_2(x, y))$.

Note that with $\vec{B} = (\partial A/\partial y, -\partial A/\partial x, 0)$, the perfect conductor boundary condition, $\vec{B} \cdot \vec{n} = 0$ is implied by a homogeneous Dirichlet boundary condition on A, as is included in the space $\mathbf{X}_0$, while the perfect insulator boundary condition, $\vec{B} \times \vec{n} = \vec{0}$, is implied by a homogeneous Neumann boundary condition on A, as is included in the space $\mathbf{X}$. In what follows, we state weak formulations and results for the latter case, $A \in \mathbf{X}$ (and, from Section 3 onwards, $A \in \widetilde{\mathbf{X}}$) as proofs for this case are slightly more technical than for $A \in \mathbf{X}_0$ (or $A \in \widetilde{\mathbf{X}}_0$). Where substantial differences occur between the two cases, we provide remarks to clarify. With homogeneous Dirichlet boundary conditions on $\vec{u}$ and perfect insulator boundary conditions on A, the weak form of (1)–(4) in two dimensions is : find $\vec{u} \in \mathbf{W}$, $A \in \mathbf{X}$, $p \in \mathbf{Q}$ such that

$$a_1(\vec{u}, \vec{v}) + c_0(\vec{u}; \vec{u}, \vec{v}) + c_1(A; \vec{v}, A) + b(p, \vec{v}) = \langle \vec{f}, \vec{v} \rangle, \tag{6}$$

$$a_2(A, \varphi) - c_1(A; \vec{u}, \varphi) = \langle E^0, \Delta\varphi \rangle, \tag{7}$$

$$b(q, \vec{u}) = 0, \tag{8}$$

for all $\vec{v} \in \mathbf{W}$, $\varphi \in \mathbf{X}$, $q \in \mathbf{Q}$, with $\mathcal{S}\vec{u} = \frac{1}{2}(\nabla\vec{u} + \nabla\vec{u}^T)$, where

$$\begin{aligned} a_1(\vec{u}, \vec{v}) &:= Re^{-1} \int_{\Omega} \mathcal{S}\vec{u} : \nabla\vec{v} \, \mathrm{d}\mathrm{X} = Re^{-1} \int_{\Omega} \mathcal{S}\vec{u} : \mathcal{S}\vec{v} \, \mathrm{d}\mathrm{X}, \\ a_2(\phi, \psi) &:= Re_m^{-1} \int_{\Omega} \Delta\phi \cdot \Delta\psi \, \mathrm{d}\mathrm{X}, \\ b(q, \vec{v}) &:= -\int_{\Omega} q(\nabla \cdot \vec{v}) \, \mathrm{d}\mathrm{X}, \\ c_0(\vec{w}; \vec{u}, \vec{v}) &:= \frac{1}{2} \int_{\Omega} (\vec{w} \cdot \nabla)\vec{u} \cdot \vec{v} \, \mathrm{d}\mathrm{X} - \frac{1}{2} \int_{\Omega} (\vec{w} \cdot \nabla)\vec{v} \cdot \vec{u} \, \mathrm{d}\mathrm{X}, \\ c_1(\psi; \vec{v}, \phi) &:= \int_{\Omega} \Delta\phi \cdot \nabla\psi \cdot \vec{v} \, \mathrm{d}\mathrm{X}. \end{aligned}$$

Remark 2.1. Note that the natural trilinear form $c(\vec{w}; \vec{u}, \vec{v}) := \int_{\Omega} (\vec{w} \cdot \nabla)\vec{u} \cdot \vec{v} \, \mathrm{d}\mathrm{X}$ is skew-symmetric in $(\vec{u}, \vec{v})$ when $\vec{w} \in H(\mathrm{div}^0, \Omega)$, allowing the use of $c_0(\vec{w}; \vec{u}, \vec{v})$ here in place of $c(\vec{w}; \vec{u}, \vec{v})$.

2.2. Properties of the weak formulation

In this section, we briefly analyse the weak form in Eqs. (6)–(8), which we write as

Formulation 1. *Find* $(\vec{u}, p, A) \in \mathbf{W} \times \mathbf{Q} \times \mathbf{X}$ *such that*

$$\mathcal{A}(\vec{u}, A; \vec{v}, \varphi) + \mathcal{C}(\vec{u}, A; \vec{u}, A; \vec{v}, \varphi) + \mathcal{B}(p; \vec{v}, \varphi) = \mathcal{L}(\vec{v}, \varphi), \tag{9}$$

$$\mathcal{B}(q; \vec{u}, A) = 0, \tag{10}$$

for all $(\vec{v}, q, \varphi) \in \mathbf{W} \times \mathbf{Q} \times \mathbf{X}$,

with

$$\begin{aligned}
\mathcal{A}(\vec{u}, A; \vec{v}, \varphi) &:= a_1(\vec{u}, \vec{v}) + a_2(A, \varphi),\\
\mathcal{B}(q; \vec{v}, \varphi) &:= b(q, \vec{v}),\\
\mathcal{C}(\vec{w}, \psi; \vec{u}, \phi; \vec{v}, \varphi) &:= c_0(\vec{w}; \vec{u}, \vec{v}) + c_1(\psi; \vec{v}, \phi) - c_1(\psi; \vec{u}, \varphi),\\
\mathcal{L}(\vec{v}, \varphi) &:= \langle \vec{f}, \vec{v} \rangle + \langle E^0, \triangle\varphi \rangle.
\end{aligned}$$

We define the product space $\mathbf{W} \times \mathbf{X}$ with the norm $|||(\vec{v}, \varphi)|||^2 := \|\vec{v}\|_1^2 + \|\varphi\|_{\mathbf{X}}^2$ and define the operator norm, $|||\mathcal{L}|||_- := \sup_{(\vec{0},0)\neq(\vec{v},\varphi)\in\mathbf{J}\times\mathbf{X}} \frac{|\mathcal{L}(\vec{v},\varphi)|}{|||(\vec{v},\varphi)|||}$. Next, we consider the properties of the forms $\mathcal{A}$, $\mathcal{B}$, and $\mathcal{C}$.

Lemma 2.1. *For any* $(\vec{v}, \varphi), (\vec{w}, \psi) \in \mathbf{W} \times \mathbf{X}$, *we have*

$$\begin{aligned}
\mathcal{A}(\vec{v}, \varphi; \vec{v}, \varphi) &\geq c_\alpha \min\{Re^{-1}, Re_m^{-1}\} |||(\vec{v}, \varphi)|||^2,\\
\mathcal{A}(\vec{w}, \psi; \vec{v}, \varphi) &\leq \max\{2Re^{-1}, Re_m^{-1}\} |||(\vec{w}, \psi)||| \cdot |||(\vec{v}, \varphi)|||,
\end{aligned} \tag{11}$$

where $c_\alpha \leq 1$ *is a constant depending only on* Ω.

Proof. Since $(\vec{v}, \varphi) \in \mathbf{W} \times \mathbf{X}$, we have

$$\begin{aligned}
\mathcal{A}(\vec{v}, \varphi; \vec{v}, \varphi) &= Re^{-1} \int_\Omega \mathcal{S}\vec{v} : \mathcal{S}\vec{v} \, \mathrm{dX} + \int_\Omega Re_m^{-1} \triangle\varphi \cdot \triangle\varphi \, \mathrm{dX}\\
&= Re^{-1} \|\mathcal{S}\vec{v}\|_0^2 + Re_m^{-1} \|\triangle\varphi\|_0^2\\
&\geq \beta_1 Re^{-1} \|\vec{v}\|_1^2 + \beta_2 Re_m^{-1} \|\varphi\|_{\mathbf{X}}^2\\
&\geq c_\alpha \min\{Re^{-1}, Re_m^{-1}\} |||(\vec{v}, \varphi)|||^2,
\end{aligned}$$

where $c_\alpha = \min\{\beta_1, \beta_2\}$, β_1 comes from Korn's Inequality [6, Corollary 11.2.22], and β_2 comes from an equivalent norm argument [7]. This gives the coercivity of $\mathcal{A}$.

For continuity,

$$\begin{aligned}
\mathcal{A}(\vec{u}, \psi; \vec{v}, \varphi) &= Re^{-1} \int_\Omega \mathcal{S}\vec{u} : \mathcal{S}\vec{v} \, \mathrm{dX} + Re_m^{-1} \int_\Omega \Delta\psi \cdot \Delta\varphi \, \mathrm{dX}\\
&\leq 2Re^{-1} \|\vec{u}\|_1 \|\vec{v}\|_1 + Re_m^{-1} \|\psi\|_{\mathbf{X}} \|\varphi\|_{\mathbf{X}}\\
&\leq \max\{2Re^{-1}, Re_m^{-1}\} |||(\vec{u}, \psi)||| \cdot |||(\vec{v}, \varphi)|||,
\end{aligned}$$

via the Cauchy–Schwarz inequality. □

Remark 2.2. If $\varphi \in \mathbf{X}_0$, then $\|\Delta\varphi\|_0^2 \geq \beta_2 \|\varphi\|_{\mathbf{X}}^2$ also holds. This is due to [8, Theorem 1.4.5] and the inequality, $\|\varphi\|_1 \leq \|\varphi\|_{H^{3/2}}$.

We state two Lemmas that follow directly from the standard Compact Imbedding Theorem for Sobolev spaces (see, e.g., [9], Theorem I.1.2), showing the trilinear forms c_0 and c_1 are well defined.

Lemma 2.2. *If* $\vec{u}, \vec{v}, \vec{w} \in \left(H^1(\Omega)\right)^2$, *then*

$$|c_0(\vec{w}; \vec{u}, \vec{v})| \leq \|\vec{w}\|_{0,4} \cdot \|\nabla\vec{u}\|_0 \cdot \|\vec{v}\|_{0,4} \leq C_0 \|\vec{w}\|_1 \cdot \|\vec{u}\|_1 \cdot \|\vec{v}\|_1, \tag{12}$$

where C_0 *is a constant depending only on* Ω.

Lemma 2.3. *If* $\psi, \phi \in \mathbf{X}(\Omega)$ *and* $\vec{v} \in \left(H^1(\Omega)\right)^2$, *then*

$$|c_1(\psi; \vec{v}, \phi)| \leq \|\nabla\psi\|_{0,4} \cdot \|\Delta\phi\|_0 \cdot \|\vec{v}\|_{0,4} \leq \|\psi\|_{1,4} \cdot \|\Delta\phi\|_0 \cdot \|\vec{v}\|_{0,4} \leq C_1 \|\psi\|_{\mathbf{X}} \cdot \|\phi\|_{\mathbf{X}} \cdot \|\vec{v}\|_1, \tag{13}$$

where C_1 *is a constant depending only on* Ω.

Proof. This is due to the fact that $\mathbf{X}$ is imbedded into $H^{3/2}(\Omega)$ [8, Theorem 1.5.4], and $H^{3/2}(\Omega)$ is imbedded into $W^{1,4}(\Omega)$ (see [9]). □

Lemma 2.4. *For any $\vec{w}, \vec{u}, \vec{v} \in \mathbf{W}$ and $\psi, \phi, \varphi \in \mathbf{X}$, the trilinear form $\mathcal{C}$ has the following properties*

$$|\mathcal{C}(\vec{w}, \psi; \vec{u}, \phi; \vec{v}, \varphi)| \le C_c |||(\vec{w}, \psi)||| \cdot |||(\vec{u}, \phi)||| \cdot |||(\vec{v}, \varphi)|||, \tag{14}$$

where C_c is a constant only depending on Ω. Furthermore,

$$\mathcal{C}(\vec{w}, \psi; \vec{v}, \varphi; \vec{v}, \varphi) = 0. \tag{15}$$

Proof. The continuity bound follows directly from inequalities (12) and (13). That $\mathcal{C}(\vec{w}, \psi; \vec{v}, \varphi; \vec{v}, \varphi) = 0$ follows directly from its definition, and those of c_0 and c_1. □

The form $b(q, \vec{v})$ is continuous and satisfies the following inf–sup condition

$$\inf_{0 \ne q \in \mathbf{Q}} \sup_{\vec{0} \ne \vec{v} \in \mathbf{W}} \frac{b(q, \vec{v})}{\|\vec{v}\|_1 \|q\|_0} \ge \Gamma > 0, \tag{16}$$

where Γ is a constant depending only on Ω [9, Chapter I.5.1].

The form $\mathcal{B}$ is obviously continuous:

$$|\mathcal{B}(q; \vec{v}, \varphi)| \le C \|q\|_0 \|\vec{v}\|_1 \le C \|q\|_0 |||(\vec{v}, \varphi)|||,$$

for all $(\vec{v}, q, \varphi) \in \mathbf{W} \times \mathbf{Q} \times \mathbf{X}$, with a constant $C > 0$. Furthermore, it inherits the inf–sup condition from b.

Lemma 2.5. *There exists a constant $\Gamma > 0$ depending only on Ω, such that*

$$\sup_{(\vec{0},0) \ne (\vec{v},\varphi) \in \mathbf{W} \times \mathbf{X}} \frac{\mathcal{B}(q; \vec{v}, \varphi)}{|||(\vec{v}, \varphi)|||} \ge \Gamma \|q\|_0,$$

for all $q \in \mathbf{Q}$.

Proof. Since

$$\mathcal{B}(q; \vec{v}, \varphi) = b(q, \vec{v}),$$

we have

$$\sup_{(\vec{0},0) \ne (\vec{v},\varphi) \in \mathbf{W} \times \mathbf{X}} \frac{\mathcal{B}(q; \vec{v}, \varphi)}{|||(\vec{v}, \varphi)|||} \ge \sup_{\vec{0} \ne \vec{v} \in \mathbf{W}} \frac{b(q, \vec{v})}{\|\vec{v}\|_1} \ge \|q\|_0 \cdot \Gamma,$$

where the last inequality follows directly from (16). □

2.3. Existence and uniqueness of solutions

From [9], we quote the main theorem that we will apply to this weak formulation.

Theorem 2.1 ([9], Theorem *IV.1.3*)**.** *Let V be a separable Hilbert space with the norm $\|\cdot\|_V$, l be a linear functional in the dual space V' and, for $w \in V$, the mapping $(u, v) \to a(w; u, v)$ be a bilinear continuous form on $V \times V$. Assume that the following hold:*

- *the bilinear form $a(w; v, v)$ is uniformly V-coercive with respect to w, i.e., there exists a constant $\alpha > 0$ such that*

  $$a(w; v, v) \ge \alpha \|v\|_V^2, \quad \forall v, w \in V.$$

- *there exists a continuous and monotonically increasing function $L : \mathbb{R}_+ \to \mathbb{R}_+$ such that for all $\mu > 0$*

  $$|a(w_1; u, v) - a(w_2; u, v)| \le L(\mu) \|u\|_V \|v\|_V \|w_1 - w_2\|_V,$$

  $$\forall u, v \in V, \quad w_1, w_2 \in S_\mu = \{w \in V; \|w\|_V \le \mu\}.$$

- *the linear function l and α satisfy*

  $$\frac{\|l\|_{V'}}{\alpha^2} \cdot L(\|l\|_{V'}/\alpha) < 1.$$

Then the problem: find $u \in V$ such that

$$a(u; u, v) = l(v), \quad \forall v \in V,$$

has a unique solution that satisfies the stability bound $\|u\|_V \le \alpha^{-1} \|l\|_{V'}$.

Theorem 2.2. *Let $\vec{f} \in \left(H^{-1}(\Omega)\right)^2$ and $E^0 \in L^2(\Omega)$, and assume that*

$$\frac{C_c |||\mathcal{L}|||_-}{c_\alpha^2 \min\{Re^{-2}, Re_m^{-2}\}} < 1, \tag{17}$$

where c_α comes from (11), and C_c comes from (14). Then, there exists a unique solution $(\vec{u}, p, A)$ in $\mathbf{W} \times \mathbf{Q} \times \mathbf{X}$ of Formulation 1. Furthermore, we have the stability bounds

$$|||(\vec{u}, A)||| \leq \frac{|||\mathcal{L}|||_-}{c_\alpha \min\{Re^{-1}, Re_m^{-1}\}}$$

and

$$\|p\|_0 \leq \Gamma^{-1}\left[\|\vec{f}\|_{-1} + 2Re^{-1}\|\vec{u}\|_1 + C_0\|\vec{u}\|_1^2 + C_1\|A\|_1^2\right],$$

where C_0 comes from (12), and C_1 comes from (13).

Proof. We first apply Theorem 2.1 to Formulation 1 restricted to $(\vec{u}, A) \in \mathbf{J} \times \mathbf{X}$, satisfying the constraint in Eq. (10). We note that $\mathbf{J} \times \mathbf{X}$ is separable, since $\mathbf{J}$ is a closed subset of $\left(H^1(\Omega)\right)^2$, $\mathbf{X}$ and $L_0^2(\Omega)$ are isomorphic (see [7]), and $\left(H^1(\Omega)\right)^2$ and $L_0^2(\Omega)$ are separable Hilbert Spaces.

For any $(\vec{w}, \psi)$, define the mapping $((\vec{u}, \phi), (\vec{v}, \varphi)) \to \mathcal{A}_1(\vec{w}, \psi; \vec{u}, \phi, \vec{v}, \varphi)$, where

$$\mathcal{A}_1(\vec{w}, \psi; \vec{u}, \phi, \vec{v}, \varphi) = \mathcal{A}(\vec{u}, \phi; \vec{v}, \varphi) + \mathcal{C}(\vec{w}, \psi; \vec{u}, \phi; \vec{v}, \varphi).$$

From inequalities (11) and (15), we have

$$\begin{aligned}|\mathcal{A}_1(\vec{w}, \psi; \vec{v}, \varphi; \vec{v}, \varphi)| &= |\mathcal{A}(\vec{v}, \varphi; \vec{v}, \varphi) + \mathcal{C}(\vec{w}, \psi; \vec{v}, \varphi; \vec{v}, \varphi)| = |\mathcal{A}(\vec{v}, \varphi; \vec{v}, \varphi)| \\ &\geq c_\alpha \min\{Re^{-1}, Re_m^{-1}\}|||(\vec{v}, \varphi)|||^2 \quad \forall (\vec{w}, \psi), (\vec{v}, \varphi) \in \mathbf{J} \times \mathbf{X}.\end{aligned}$$

Finally, linearity in the first argument of $\mathcal{C}$ and inequality (14) give

$$\begin{aligned}|\mathcal{A}_1(\vec{w}_1, \psi_1; \vec{u}, \phi; \vec{v}, \varphi) &- \mathcal{A}_1(\vec{w}_2, \psi_2; \vec{u}, \phi; \vec{v}, \varphi)| \\ &= |\mathcal{C}(\vec{w}_1, \psi_1; \vec{u}, \phi; \vec{v}, \varphi) - \mathcal{C}(\vec{w}_2, \psi_2; \vec{u}, \phi; \vec{v}, \varphi)| \\ &= |\mathcal{C}(\vec{w}_1 - \vec{w}_2, \psi_1 - \psi_2; \vec{u}, \phi; \vec{v}, \varphi)| \\ &\leq C_c|||(\vec{w}_1 - \vec{w}_2, \psi_1 - \psi_2)|||\cdot|||(\vec{u}, \phi)|||\cdot|||(\vec{v}, \varphi)|||,\end{aligned}$$

$\forall (\vec{w}_1, \psi_1), (\vec{w}_2, \psi_2), (\vec{u}, \phi), (\vec{v}, \varphi) \in \mathbf{J} \times \mathbf{X}$. In the notation of Theorem 2.1, this gives $L(\mu) = C_c$, where C_c comes from (14).

Thus, by Theorem 2.1, assumption (17) proves existence of a unique solution to Formulation 1 restricted to $\mathbf{J} \times \mathbf{X}$. Let $(\vec{u}, A) \in \mathbf{J} \times \mathbf{X}$ be that unique solution, which satisfies the stability bound stated.

By the inf–sup condition in Eq. (16), there also exists a unique solution of the following problem: find $p \in \mathbf{Q}$ such that

$$\begin{aligned}b(p, \vec{v}) = \mathcal{B}(p; \vec{v}, \varphi) &= \mathcal{L}(\vec{v}, \varphi) - \mathcal{A}(\vec{u}, A; \vec{v}, \varphi) - \mathcal{C}(\vec{u}, A; \vec{u}, A; \vec{v}, \varphi), \\ &= \langle \vec{f}, \vec{v}\rangle - a_1(\vec{u}, \vec{v}) - c_0(\vec{u}; \vec{u}, \vec{v}) - c_1(A; \vec{v}, A),\end{aligned}$$

for all $\vec{v} \in \mathbf{W} \setminus \mathbf{J}$ [9, Theorem IV.1.4].

From the inf–sup condition, we have

$$\begin{aligned}\Gamma\|p\|_0 &\leq \sup_{\vec{0} \neq \vec{v} \in \mathbf{W}} \frac{b(q, \vec{v})}{\|\vec{v}\|_1} \\ &= \sup_{\vec{0} \neq \vec{v} \in \mathbf{W}} \frac{\langle \vec{f}, \vec{v}\rangle - a_1(\vec{u}, \vec{v}) - c_0(\vec{u}; \vec{u}, \vec{v}) - c_1(A; \vec{v}, A)}{\|\vec{v}\|_1}.\end{aligned}$$

Combining this with Eqs. (12) and (13), we obtain the bound on p. □

Any conforming mixed finite-element discretization of (9) and (10) necessarily requires the use of higher-order-conforming elements for $A \in \mathbf{X}$, such as Argyris triangle elements, or Bogner–Fox–Schmit elements [10]. By using the antisymmetric form of c_0 in the weak formulation, existence and uniqueness of the solution to the discretized form of Formulation 1 follows immediately, so long as an appropriate inf–sup stable finite-element pair is used for the velocity and pressure unknowns. While these approximations have been thoroughly studied, particularly for fourth-order problems, their use also poses some additional difficulties for implementation and efficient solution of the resulting linearized systems. Thus, we next consider a modified approach using H^1-conforming elements, following [4,5].

3. Uncurled formulation of MHD

Introducing the vector potential into Eq. (2) leads to the bilinear form $a_2(\phi, \psi)$, which requires higher-order conforming elements for discretization. Notice, however, that, in the steady-state case, Eq. (2) can be rewritten as $\nabla \times (-\vec{u} \times \vec{B} + Re_m^{-1} \nabla \times \vec{B}) = -\nabla \times \vec{E}_{\text{stat}}$, which can be simplified into a first-order equation in $\vec{B}$, resulting in a second-order equation in A. Using this in place of (2), we derive an "uncurled" weak formulation: find $(\vec{u}, A) \in \mathbf{W} \times \widetilde{\mathbf{X}}$, $p \in \mathbf{Q}$ such that

$$a_1(\vec{u}, \vec{v}) + c_0(\vec{u}; \vec{u}, \vec{v}) + \widetilde{c}_1(A; \vec{v}, A) + b(p, \vec{v}) = \langle \vec{f}, \vec{v} \rangle, \tag{18}$$

$$\widetilde{a}_2(A, \psi) + \widetilde{c}_2(A; \vec{u}, \psi) = \langle -E^0, \psi \rangle, \tag{19}$$

$$b(q, \vec{u}) = 0, \tag{20}$$

for all $(\vec{v}, \psi) \in \mathbf{W} \times \widetilde{\mathbf{X}}$, $q \in \mathbf{Q}$, where

$$\widetilde{a}_2(\phi, \psi) := Re_m^{-1} \int_\Omega \nabla\phi \cdot \nabla\psi \, \mathrm{dX},$$

$$\widetilde{c}_1(\phi; \vec{v}, A) := \left\langle \left(\frac{1}{2}\left[\frac{\partial A}{\partial y} \cdot \frac{\partial \phi}{\partial y} - \frac{\partial A}{\partial x} \cdot \frac{\partial \phi}{\partial x} \right], -\frac{\partial A}{\partial x} \cdot \frac{\partial \phi}{\partial y} \right), \frac{\partial \vec{v}}{\partial x} \right\rangle_0 + \left\langle \left(-\frac{\partial A}{\partial x} \cdot \frac{\partial \phi}{\partial y}, \frac{1}{2}\left[\frac{\partial A}{\partial x} \cdot \frac{\partial \phi}{\partial x} - \frac{\partial A}{\partial y} \cdot \frac{\partial \phi}{\partial y} \right] \right), \frac{\partial \vec{v}}{\partial y} \right\rangle_0,$$

$$\widetilde{c}_2(\phi; \vec{u}, \psi) := \int_\Omega \vec{u} \cdot \nabla\phi \cdot \psi \, \mathrm{dX}.$$

Note, we now integrate by parts on the stress tensor in (1), writing $\langle \nabla \cdot T_M, \vec{v} \rangle_0 = -\langle T_M, \nabla\vec{v} \rangle_0$, since $c_1(\phi, \vec{u}, \psi)$ is obviously ill-defined if $\Delta\psi \notin L^2(\Omega)$. The corresponding term in (7) becomes $\widetilde{c}_2(\phi; \vec{u}, \psi)$ due to the "uncurling" of (2). This is the formulation used in [4,5]; in [4], an inf–sup stable finite-element method pair is used for discretization of $\vec{u}$ and p, while a stabilized pair was used in [5]. Neither of these papers considered theoretical analysis of this formulation, which we do here.

The analysis below shows that, in contrast to the formulation considered above, this formulation does not directly yield unique solutions under the classical theory. To address this, we consider analysis of the weak form at both the continuum and discrete levels. We separately consider the well-posedness of the Newton linearizations in Section 4.

3.1. Mixed variational formulation

Extending the bilinear form $\mathcal{B}$ to act on $\widetilde{\mathbf{X}}$ gives

$$\widetilde{\mathcal{B}}(q; \vec{v}, \psi) := b(q, \vec{v}),$$

where the only difference between $\mathcal{B}$ and $\widetilde{\mathcal{B}}$ is that they act on $\mathbf{X}$ and $\widetilde{\mathbf{X}}$, respectively. The mixed variational formulation in (18)–(20) can then be rewritten as

Formulation 2. *Find $(\vec{u}, p, A) \in \mathbf{W} \times \mathbf{Q} \times \widetilde{\mathbf{X}}$ such that*

$$\widetilde{\mathcal{A}}(\vec{u}, A; \vec{v}, \psi) + \widetilde{\mathcal{C}}(\vec{u}, A; \vec{u}, A; \vec{v}, \psi) + \widetilde{\mathcal{B}}(p; \vec{v}, \psi) = \widetilde{\mathcal{L}}(\vec{v}, \psi), \tag{21}$$

$$\widetilde{\mathcal{B}}(q; \vec{u}, A) = 0,$$

for all $(\vec{v}, q, \psi) \in \mathbf{W} \times \mathbf{Q} \times \widetilde{\mathbf{X}}$, where

$$\widetilde{\mathcal{A}}(\vec{u}, A; \vec{v}, \psi) := a_1(\vec{u}, \vec{v}) + \widetilde{a}_2(A, \psi),$$

$$\widetilde{\mathcal{C}}(\vec{w}, \phi; \vec{u}, A; \vec{v}, \psi) := c_0(\vec{w}; \vec{u}, \vec{v}) + \widetilde{c}_1(\phi; \vec{v}, A) + \widetilde{c}_2(\phi; \vec{u}, \psi),$$

$$\widetilde{\mathcal{L}}(\vec{v}, \psi) := \langle \vec{f}, \vec{v} \rangle + \langle -E^0, \psi \rangle.$$

For our later analysis, we note some properties of the terms in this formulation.

Lemma 3.1. *Let $\phi, A \in H^1(\Omega)$ and $\vec{v} \in \left(H^1(\Omega)\right)^2$, then*

$$\|\widetilde{c}_1(\phi; \vec{v}, A)\| \le C \|\phi\|_1 \|\vec{v}\|_1 \|\nabla A\|_{0,\infty},$$

where C is a constant depending only on Ω.

Lemma 3.2. *Let $\phi, \psi \in H^1(\Omega)$ and $\vec{u} \in \left(H^1(\Omega)\right)^2$, then*

$$|\widetilde{c}_2(\phi; \vec{u}, \psi)| \le \|\vec{u}\|_{0,4} \cdot \|\nabla\phi\|_0 \cdot \|\psi\|_{0,4} \le C \|\vec{u}\|_1 \cdot \|\phi\|_1 \cdot \|\psi\|_1,$$

where C is a constant depending only on Ω.

We define the product space $\mathbf{W} \times \widetilde{\mathbf{X}}$ with the norm

$$\|(\vec{v}, \psi)\|_1^2 := \|\vec{v}\|_1^2 + \|\psi\|_1^2,$$

and consider ellipticity of $\widetilde{\mathcal{A}}$ on this product space.

Lemma 3.3. *For any $(\vec{v}, \varphi) \in \mathbf{W} \times \widetilde{\mathbf{X}}$, we have*

$$\widetilde{\mathcal{A}}(\vec{v}, \varphi; \vec{v}, \varphi) \geq \widetilde{c}_\alpha \min\{Re^{-1}, Re_m^{-1}\}\|(\vec{v}, \varphi)\|_1^2,$$
$$\widetilde{\mathcal{A}}(\vec{w}, \psi; \vec{v}, \varphi) \leq \max\{2Re^{-1}, Re_m^{-1}\}\|(\vec{w}, \psi)\|_1\|(\vec{v}, \varphi)\|_1,$$

where $\widetilde{c}_\alpha \leq 1$ is a constant depending only on Ω.

Proof. The proof follows that of Lemma 2.1, substituting the Poincaré inequality [6],

$$\|\nabla\varphi\|_0^2 \geq \xi\|\varphi\|_1^2, \quad \forall\varphi \in \widetilde{\mathbf{X}},$$

for the regularity argument used in the coercivity bound. □

Remark 3.1. For $\varphi \in \widetilde{\mathbf{X}}_0$, the Poincaré inequality also gives the coercivity result.

The form $\widetilde{\mathcal{B}}$ is again continuous:

$$|\widetilde{\mathcal{B}}(q; \vec{v}, \psi)| \leq C\|q\|_0\|\vec{v}\|_1 \leq \widetilde{C}_b\|q\|_0\|(\vec{v}, \psi)\|_1, \tag{22}$$

for all $(\vec{v}, q, \psi) \in \mathbf{W} \times \mathbf{Q} \times \widetilde{\mathbf{X}}$, with a constant $\widetilde{C}_b > 0$, and inherits the inf–sup condition from b:

Lemma 3.4. *There exists a constant $\Gamma > 0$ depending only on Ω such that*

$$\sup_{(\vec{0},0)\neq(\vec{v},\psi)\in\mathbf{W}\times\widetilde{\mathbf{X}}} \frac{\widetilde{\mathcal{B}}(q; \vec{v}, \psi)}{\|(\vec{v}, \psi)\|_1} \geq \Gamma\|q\|_0, \tag{23}$$

for all $q \in \mathbf{Q}$.

The form $\widetilde{\mathcal{C}}$ no longer satisfies the desired zero property $\widetilde{\mathcal{C}}(\vec{w}, \phi; \vec{v}, \psi; \vec{v}, \psi) = 0$. Also, $\widetilde{c}_1$ is not obviously continuous in $H^1(\Omega)$. Consequently, classical results, such as Theorem 2.1, cannot be directly applied to establish existence and uniqueness of solutions to Formulation 2. Instead, we tackle this question indirectly, leveraging the result given in Theorem 2.2 for Formulation 1.

3.2. Relationship between solutions of the two formulations

Formulations 1 and 2 offer two weak formulations of the steady-state visco-resistive MHD problem, (1)–(4). A natural question is whether the solutions of these two formulations are the same. While the spaces $\mathbf{X}_0$ and $\widetilde{\mathbf{X}}$ are the natural spaces for the above analysis, additional regularity is needed to guarantee some equivalence between the two formulations (see Remark 3.4). Note that if the boundary of Ω is $C^{1,1}$ or Ω is convex, then the space $\mathbf{X}$ coincides with $H^2(\Omega)$ up to boundary conditions (and $\mathbf{X}_0$ coincides with $H^2(\Omega)$ restricted to functions that satisfy a homogeneous Dirichlet boundary condition), see, for example, [11]. In the following, we prove the equivalence of Formulations 1 and 2 under the assumption that Ω has a $C^{1,1}$ boundary.

Theorem 3.1. *Assume that $(\vec{u}, p, A) \in \mathbf{W} \times \mathbf{Q} \times \mathbf{X}$ is a solution of Formulation 1, then $(\vec{u}, p, A)$ is also a solution of Formulation 2.*

Proof. Let $(\vec{u}, p, A) \in \mathbf{W} \times \mathbf{Q} \times \mathbf{X}$ be a solution of Formulation 1. According to (5), the following equality holds

$$\int_\Omega \Delta A \cdot (\nabla A \cdot \vec{v})\,\mathrm{dX} = -\int_\Omega (\nabla \cdot T_M) \cdot \vec{v}\,\mathrm{dX} = \int_\Omega T_M : \nabla\vec{v}\,\mathrm{dX}, \quad \forall\vec{v} \in \mathbf{W}. \tag{24}$$

Then, (6) is the same as (18). For any $\psi \in \widetilde{\mathbf{X}} \subseteq L^2(\Omega)$, there exists $\varphi \in \mathbf{X}$ such that $\Delta\varphi = \psi$ (see [7, Lemma 2.1]). In (7),

$$\int_\Omega -\vec{u} \cdot \nabla A \cdot \Delta\varphi\,\mathrm{dX} + \int_\Omega Re_m^{-1}\Delta A \cdot \Delta\varphi\,\mathrm{dX} = \langle E^0, \Delta\varphi\rangle, \quad \forall\varphi \in \mathbf{X},$$

taking $\Delta\varphi = \psi$ implies (19). So $(\vec{u}, p, A)$ is also a solution of Formulation 2. □

Remark 3.2. When $\psi \in \widetilde{\mathbf{X}}_0$, [7, Lemma A.1] gives the existence of $\varphi \in \mathbf{X}_0$ such that $\Delta\varphi = \psi$ in Ω.

Remark 3.3. Theorem 3.1 stands as an existence theorem for solutions to Formulation 2, since the unique solution to Formulation 1 (under the assumptions of Theorem 2.2) is always a solution to Formulation 2. This holds as long as $A \in W^{1,4}(\Omega)$, which is true since $A \in \mathbf{X}$. However, showing the converse result, that smooth-enough solutions of Formulation 2 are also solutions of Formulation 1 requires, to our knowledge, more regularity, as in the following result.

Theorem 3.2. *Assume that Ω has a $C^{1,1}$ boundary and $(\vec{u}, p, A) \in \mathbf{W} \times \mathbf{Q} \times \widetilde{\mathbf{X}}$ is a solution of Formulation 2 and that this solution is smooth enough such that $A \in H^2(\Omega)$. Then, $(\vec{u}, p, A)$ is also a solution of Formulation 1.*

Proof. Let $(\vec{u}, p, A) \in \mathbf{W} \times \mathbf{Q} \times \widetilde{\mathbf{X}}$ be a solution of Formulation 2. For $A \in \widetilde{\mathbf{X}}$ and $\vec{v} \in \left(H_0^1(\Omega)\right)^2$, the following equality holds

$$\int_\Omega T_M : \nabla\vec{v}\,\mathrm{dX} = -\int_\Omega (\nabla \cdot T_M) \cdot \vec{v}\,\mathrm{dX} = \int_\Omega \Delta A \cdot (\nabla A \cdot \vec{v})\,\mathrm{dX}, \quad \forall \vec{v} \in \mathbf{W}.$$

Then, (18) is the same as (6). Furthermore,

$$\int_\Omega \left[\vec{u} \cdot \nabla A \cdot \psi + Re_m^{-1} \nabla A \cdot \nabla \psi\right]\mathrm{dX} = -\int_\Omega E^0 \cdot \psi\,\mathrm{dX}, \quad \forall \psi \in \widetilde{\mathbf{X}},$$

can be rewritten as

$$\int_\Omega \nabla A \cdot \nabla \psi\,\mathrm{dX} = -Re_m \int_\Omega \left(E^0 + \vec{u} \cdot \nabla A\right) \cdot \psi\,\mathrm{dX}, \quad \forall \psi \in \widetilde{\mathbf{X}}.$$

Since $\int_\Omega E^0 \mathrm{dX} = 0$ and $\int_\Omega \vec{u} \cdot \nabla A\,\mathrm{dX} = -\int_\Omega (\nabla \cdot \vec{u}) A\,\mathrm{dX} + \int_{\partial\Omega} (\vec{u} \cdot \vec{n}) A\,\mathrm{dX} = 0$, we have $\int_\Omega (E^0 + \vec{u} \cdot \nabla A)\,\mathrm{dX} = 0$. Using the results of Proposition 1.2 of [9], the weak form of finding $w \in \mathbf{X}$ such that

$$\int_\Omega \nabla w \cdot \nabla \psi\,\mathrm{dX} = \int_\Omega -Re_m \left(E^0 + \vec{u} \cdot \nabla A\right) \cdot \psi\,\mathrm{dX}, \quad \forall \psi \in \widetilde{\mathbf{X}}, \tag{25}$$

has a unique solution, and if $w \in H^2(\Omega)$, then it is the strong solution of the Neumann problem,

$$\begin{cases} -\Delta w &= -Re_m(E^0 + \vec{u} \cdot \nabla A), \quad \text{in } \Omega, \\ \frac{\partial w}{\partial \vec{n}} &= 0, \quad \text{on } \partial\Omega, \\ \int_\Omega w\,\mathrm{dX} &= 0. \end{cases} \tag{26}$$

Since Ω has a $C^{1,1}$ boundary, $\mathbf{X} = \{\varphi \in H^2(\Omega) \cap L_0^2(\Omega) \mid \frac{\partial \varphi}{\partial \vec{n}} = 0\}$ [11]. Since $A \in H^2(\Omega)$, from Proposition 1.2 of [9], we have that (26) has a unique solution, $w \in H^2(\Omega)$, which is given by $w = A$, implying that $-\vec{u} \cdot \nabla A + Re_m^{-1} \Delta A = E^0$. For $\varphi \in \mathbf{X}$, multiplying both sides by $\Delta\varphi$ and integrating yields (7). So $(\vec{u}, p, A)$ is also a solution of Formulation 1. □

Remark 3.4. In order to guarantee the solution of (25) is the solution of (26), extra smoothness is needed, that is, $w \in H^2(\Omega)$ (i.e., $A \in H^2(\Omega)$), which is guaranteed when Ω has a $C^{1,1}$ boundary.

Remark 3.5. Using the Lax–Milgram Lemma, problem (25) considered over $H_0^1(\Omega)$, has one and only one solution, $w \in H^1(\Omega)$. By Theorem 1.8 of [9], if $w \in H^2(\Omega)$, then it is the strong solution of the corresponding Dirichlet problem. Thus, Theorem 3.2 also applies in the case when $A \in \widetilde{\mathbf{X}}_0$ and Ω has a $C^{1,1}$ boundary.

Theorem 3.3. *Assume that Ω has a $C^{1,1}$ boundary and that (17) holds. Then, Formulation 2 has at least one solution $(\vec{u}, p, A) \in \mathbf{W} \times \mathbf{Q} \times \widetilde{\mathbf{X}}$, which is the unique solution of Formulation 1. Furthermore, if all of the solutions of Formulation 2 satisfy $(\vec{u}, p, A) \in \mathbf{W} \times \mathbf{Q} \times \mathbf{X}$, then Formulation 1 and Formulation 2 have the same solution, and the solution is unique.*

Proof. Since (17) holds, Theorem 2.2 states that Formulation 1 has a unique solution $(\vec{u}, p, A)$. According to Theorem 3.1, $(\vec{u}, p, A)$ is also a solution of Formulation 2.

If $A \in \mathbf{X}$, Theorem 3.2 states that the solution $(\vec{u}, p, A)$ of Formulation 2 is also a solution of Formulation 1. However, since (17) holds, Formulation 1 has only one solution. This means that Formulation 2 has only one solution. □

3.3. Finite-element discretization

In this subsection, we introduce a mixed finite-element approximation of the uncurled formulation and discuss the convergence rates that are obtained under some standard smoothness assumptions.

Let $\mathcal{T}_h$ be a quasi-uniform family of subdivisions that partition Ω into triangles or quadrilaterals, $\mathcal{K}$, with diameters bounded by h [9, Chapter I, Definitions A.2]. Based on these meshes, we construct a series of finite-element spaces satisfying

$$\mathbf{W}_h \subset \mathbf{W}, \mathbf{X}_h \subset \widetilde{\mathbf{X}}, \mathbf{Q}_h \subset \mathbf{Q}.$$

The discretization of Formulation 2 can be written as

Formulation 3. *Find $(\vec{u}_h, p_h, A_h) \in \mathbf{W}_h \times \mathbf{Q}_h \times \mathbf{X}_h$ such that*

$$\begin{aligned} \widetilde{\mathcal{A}}(\vec{u}_h, A_h; \vec{v}, \psi) + \widetilde{\mathcal{C}}(\vec{u}_h, A_h; \vec{u}_h, A_h; \vec{v}, \psi) + \widetilde{\mathcal{B}}(p_h; \vec{v}, \psi) &= \widetilde{\mathcal{L}}(\vec{v}, \psi), \\ \widetilde{\mathcal{B}}(q; \vec{u}_h, A_h) &= 0, \end{aligned}$$

for all $(\vec{v}, q, \psi) \in \mathbf{W}_h \times \mathbf{Q}_h \times \mathbf{X}_h$.

In the following, we assume that Formulation 3 has a unique solution. We consider the 2D problem and assume that the solution $A \in H^{s+1}(\Omega)$, $s > 1$, then we have

$$\|\nabla A\|_{0,\infty} \le C_A \|\nabla A\|_s \le C_A \|A\|_{s+1}, \quad s > 1. \tag{27}$$

More details can be found in [12, Theorem IV4.12].

Theorem 3.4. *Assume that (17) holds and that $(\vec{u}, A)$ is the solution of Formulation 2 with $\vec{u} \in \left(H^1(\Omega)\right)^2$ and $A \in H^{s+1}(\Omega)$ for $s > 1$. Let $\mathcal{T}_h$ be given, and assume that $(\vec{u}_h, A_h)$ is the solution of Formulation 3 satisfying $\|\vec{u}_h\|_1 + \|\nabla A_h\|_{0,\infty} \le d_h$, where d_h is a constant depending on $\mathcal{T}_h$ or h. Then,*

$$\|(\vec{u} - \vec{u}_h, A - A_h)\|_1 \le C \left(\inf_{(\vec{v},\psi)\in \mathbf{W}_h \times \mathbf{X}_h} \|(\vec{u} - \vec{v}, A - \psi)\|_1 + \inf_{q \in \mathbf{Q}_h} \|p - q\|_0 \right),$$

with a constant $C > 0$, depending on d_h, and sufficiently small values of Re and Re_m.

Proof. Subtracting the first line of Formulation 3 from (21), we have

$$\widetilde{\mathcal{A}}(\vec{u} - \vec{u}_h, A - A_h; \vec{v}, \psi) + \widetilde{\mathcal{C}}(\vec{u} - \vec{u}_h, A - A_h; \vec{u}, A; \vec{v}, \psi) + \widetilde{\mathcal{C}}(\vec{u}_h, A_h; \vec{u} - \vec{u}_h, A - A_h; \vec{v}, \psi) + \widetilde{\mathcal{B}}(p - p_h; \vec{v}, \psi) = 0, \tag{28}$$

for all $(\vec{v}, \psi) \in \mathbf{W}_h \times \mathbf{X}_h$.

From (28), for any $\vec{v}$ such that $b(q, \vec{v}) = 0$ for all $q \in \mathbf{Q}_h$, we have

$$\begin{aligned}
&\widetilde{\mathcal{A}}(\vec{v} - \vec{u}_h, \psi - A_h; \vec{v} - \vec{u}_h, \psi - A_h) + \widetilde{\mathcal{C}}(\vec{v} - \vec{u}_h, \psi - A_h; \vec{u}, A; \vec{v} - \vec{u}_h, \psi - A_h) \\
&\quad + \widetilde{\mathcal{C}}(\vec{u}_h, A_h; \vec{v} - \vec{u}_h, \psi - A_h; \vec{v} - \vec{u}_h, \psi - A_h) \\
&= \widetilde{\mathcal{A}}(\vec{v} - \vec{u}, \psi - A; \vec{v} - \vec{u}_h, \psi - A_h) + \widetilde{\mathcal{C}}(\vec{v} - \vec{u}, \psi - A; \vec{u}, A; \vec{v} - \vec{u}_h, \psi - A_h) \\
&\quad + \widetilde{\mathcal{C}}(\vec{u}_h, A_h; \vec{v} - \vec{u}, \psi - A; \vec{v} - \vec{u}_h, \psi - A_h) - \widetilde{\mathcal{B}}(p - p_h; \vec{v} - \vec{u}_h, \psi - A_h),
\end{aligned} \tag{29}$$

For such a $\vec{v}$, we also have

$$\widetilde{\mathcal{B}}(p - p_h; \vec{v} - \vec{u}_h, \psi - A_h) = \widetilde{\mathcal{B}}(p - q; \vec{v} - \vec{u}_h, \psi - A_h), \tag{30}$$

for all $q \in \mathbf{Q}_h$.

From (29) and (30), we have the estimate

$$\begin{aligned}
\text{r.h.s of (29)} \;\le\; & \|(\vec{v} - \vec{u}_h, \psi - A_h)\|_1 \Big[\max\{2Re^{-1}, Re_m^{-1}\} \|(\vec{v} - \vec{u}, \psi - A)\|_1 \\
& + C\|(\vec{v} - \vec{u}, \psi - A)\|_1 \left(\|\vec{u}\|_1 + C_A \|A\|_{s+1} \right) \\
& + C\|(\vec{v} - \vec{u}, \psi - A)\|_1 \left(\|\vec{u}_h\|_1 + \|\nabla A_h\|_{0,\infty} \right) + \widetilde{C}_b \|p - q\|_0 \Big] \\
\le\; & C_r \|(\vec{v} - \vec{u}_h, \psi - A_h)\|_1 \left(\|(\vec{u} - \vec{v}, A - \psi)\|_1 + \|p - q\|_0 \right),
\end{aligned} \tag{31}$$

where $C_r = \max\left\{2Re^{-1}, Re_m^{-1}\right\} + 2C \cdot \max\left\{ \|\vec{u}\|_1 + C_A\|A\|_{s+1,2}, \|\vec{u}_h\|_1 + \|\nabla A_h\|_{0,\infty} \right\} + \widetilde{C}_b$, C_A comes from (27), and $\widetilde{C}_b$ comes from (22). Since $(\vec{u}, A)$ is the solution of the continuous problem and $\vec{u} \in H^1(\Omega)$ and $A \in H^{s+1}(\Omega)$, then $\|\vec{u}\|_1 + C_A\|A\|_{s+1,2}$ can be bounded by some constant. By assumption, so can $\|\vec{u}_h\|_1 + \|\nabla A_h\|_{0,\infty}$.

Similarly,

$$\begin{aligned}
\text{l.h.s of (29)} \;\ge\; & \widetilde{c}_\alpha \min\{Re^{-1}, Re_m^{-1}\} \cdot \|(\vec{v} - \vec{u}_h, \psi - A_h)\|_1^2 \\
& - C\|(\vec{v} - \vec{u}_h, \psi - A_h)\|_1^2 \cdot \left(\|\vec{u}\|_1 + \|A\|_{s+1,2} \right) \\
& - C\|(\vec{v} - \vec{u}_h, \psi - A_h)\|_1^2 \cdot \left(\|\vec{u}_h\|_1 + \|\nabla A_h\|_{0,\infty} \right) \\
\ge\; & C_l \|(\vec{v} - \vec{u}_h, \psi - A_h)\|_1^2,
\end{aligned} \tag{32}$$

where $C_l = \widetilde{c}_\alpha \min\{Re^{-1}, Re_m^{-1}\} - 2C \cdot \max\left\{ \|\vec{u}\|_1 + C_A\|A\|_{s+1,2}, \|\vec{u}_h\|_1 + \|\nabla A_h\|_{0,\infty} \right\}$ and $\widetilde{c}_\alpha$ comes from Lemma 3.3. Here, we assume that $\widetilde{c}_\alpha \min\{Re^{-1}, Re_m^{-1}\}$ is large enough such that $C_l \ge \frac{\widetilde{c}_\alpha}{2} \min\{Re^{-1}, Re_m^{-1}\}$.

According to (31) and (32), we have the following estimate

$$\|(\vec{v} - \vec{u}_h, \psi - A_h)\|_1 \le C \left(\|(\vec{u} - \vec{v}, A - \psi)\|_1 + \|p - q\|_0 \right),$$

where $C = C_r / C_l$. Furthermore,

$$\begin{aligned}
\|(\vec{u} - \vec{u}_h, A - A_h)\|_1 \;\le\; & \left(\|(\vec{u} - \vec{v}, A - \psi)\|_1 + \|(\vec{v} - \vec{u}_h, \psi - A_h)\|_1 \right) \\
\le\; & C\|(\vec{u} - \vec{v}, A - \psi)\|_1 + C\|p - q\|_0.
\end{aligned}$$

Now, let $\vec{v} \in \mathbf{W}_h$ be arbitrary and take $\vec{w} \in \mathbf{W}_h$ to be a solution of

$$b(q, \vec{w}) = b(q, \vec{u} - \vec{v}), \quad \forall q \in \mathbf{Q}_h.$$

Since b satisfies an inf–sup condition and a continuity condition, then there exists a solution to this problem such that

$$\|\vec{w}\|_1 \le C\|\vec{u} - \vec{v}\|_1,$$

and such that $b(q, \vec{w} + \vec{v}) = 0$ for all $q \in \mathbf{Q}_h$. By the triangle inequality and using the result above, we then have

$$\begin{aligned}\|(\vec{u} - \vec{u}_h, A - A_h)\|_1 &\le C\|(\vec{u} - (\vec{w} + \vec{v}), A - \psi)\|_1 + C\|p - q\|_0 \\ &\le C\|(\vec{u} - \vec{v}, A - \psi)\|_1 + C\|\vec{w}\|_1 + C\|p - q\|_0 \\ &\le C\|(\vec{u} - \vec{v}, A - \psi)\|_1 + C\|p - q\|_0. \quad \square\end{aligned}$$

Remark 3.6. In Theorem 3.4, the constant d_h may depend on $\mathcal{T}_h$ or h. However, for problems with sufficiently smooth solutions, such as the Hartmann flow problem in Section 5, it is reasonable to expect to bound d_h independently of $\mathcal{T}_h$ and h.

To give a more precise definition of our finite-element approximations, define, on an element $\mathcal{K}$,

$$\mathcal{P}_\ell(\mathcal{K}) := \text{the space of polynomials of degree} \le \ell,$$

and let $\mathcal{C}^0(\bar{\Omega})$ denote the standard space of continuous functions on $\bar{\Omega}$. The finite-element spaces are defined as

$$\begin{aligned}\mathbf{W}_h &:= \{\vec{v}_h \in \mathcal{C}^0(\bar{\Omega}) : \vec{v}_h|_{\mathcal{K}} \in (\mathcal{P}_{\ell+1})^2, \quad \forall \mathcal{K} \in \mathcal{T}_h\}, \\ \mathbf{Q}_h &:= \{q_h \in \mathcal{C}^0(\bar{\Omega}) : q_h|_{\mathcal{K}} \in \mathcal{P}_\ell, \quad \forall \mathcal{K} \in \mathcal{T}_h\}, \\ \mathbf{X}_h &:= \{\psi_h \in \mathcal{C}^0(\bar{\Omega}) : \psi_h|_{\mathcal{K}} \in \mathcal{P}_{\ell+1}, \quad \forall \mathcal{K} \in \mathcal{T}_h\},\end{aligned}$$

where $\ell \ge 1$. In what follows, we make standard approximation assumptions for generalized Taylor–Hood mixed finite-elements on either triangular or quadrilateral elements in 2D [13, Proposition 8.2.2] as well as for the scalar space $\mathbf{X}_h$.

Assumption 1. Let $\ell \ge 1, s > 1$. Assume that

$$\inf_{\vec{v}_h \in \mathbf{W}_h} \|\vec{u} - \vec{v}_h\|_1 + \inf_{q_h \in \mathbf{Q}_h} \|p - q_h\|_0 \le Ch^{\min\{s,\ell+1\}}\left[\|u\|_{s+1} + \|p\|_s\right],$$

for all $(\vec{u}, p) \in H^{s+1}(\Omega)^2 \times H^s(\Omega)$ and that

$$\inf_{\psi_h \in \mathbf{X}_h} \|A - \psi_h\|_1 \le Ch^{\min\{s,\ell+1\}}\|A\|_{s+1},$$

for all $A \in H^{s+1}(\Omega)$.

Corollary 3.1. *Let $(\vec{u}_h, A_h) \in \mathbf{W}_h \times \mathbf{X}_h$ be the finite-element approximation in Formulation 3. Under the assumptions of Theorem 3.4 and Assumption 1, we have the error bound*

$$\|(\vec{u} - \vec{u}_h, A - A_h)\|_1 \le Ch^{\min\{s,\ell+1\}}\left[\|\vec{u}\|_{s+1} + \|p\|_s + \|A\|_{s+1}\right].$$

4. Newton's method

Since the weak formulation in (18)–(20) is nonlinear, we use Newton's method to derive a linearized system. As expected, the discrete form leads to a saddle-point problem [14,15]. Here, we focus on the linearization steps and show that the resulting systems are well-posed.

4.1. Newton linearizations

Let $\mathbf{S} = \mathbf{W} \times \widetilde{\mathbf{X}}$ with the norm $\|W\|_1^2 = \|\vec{v}\|_1^2 + \|\psi\|_1^2$ for all $W = (\vec{v}, \psi) \in \mathbf{S}$. For convenience, we denote the solutions of Formulations 2 and 3 as (U^*, p^*), (U_h^*, p_h^*), respectively.

For $U = (\vec{u}, A)$, $W = (\vec{v}, \psi) \in \mathbf{S}$, define the following operators:

$$\begin{aligned}\mathcal{L}_1(\vec{u}, A, p)[\vec{v}] &:= a_1(\vec{u}, \vec{v}) + b(p, \vec{v}) + c_0(\vec{u}; \vec{u}, \vec{v}) + \widetilde{c}_1(A; \vec{v}, A) - \langle \vec{f}, \vec{v}\rangle, \\ \mathcal{L}_2(\vec{u}, A, p)[\psi] &:= \widetilde{a}_2(A, \psi) + \widetilde{c}_2(A; \vec{u}, \psi) + \langle E^0, \psi\rangle, \\ \mathcal{L}_3(\vec{u}, A, p)[q] &:= -b(q, \vec{u}).\end{aligned}$$

Problem (18)–(20) is equivalent to

$$\mathcal{L}_1(\vec{u}, A, p)[\vec{v}] = 0, \qquad \forall \vec{v} \in \mathbf{W}, \tag{33}$$

$$\mathcal{L}_2(\vec{u}, A, p)[\psi] = 0, \qquad \forall \psi \in \widetilde{\mathbf{X}}, \tag{34}$$

$$\mathcal{L}_3(\vec{u}, A, p)[q] = 0, \qquad \forall q \in \mathbf{Q}.$$

Since the variational system contains nonlinearities in both (33) and (34), we linearize the above forms. Let $\vec{u}_k, A_k, p_k$ be the current approximations for $\vec{u}, A, p$, respectively and $\delta\vec{u}_k = \vec{u}_{k+1} - \vec{u}_k$, $\delta A = A_{k+1} - A_k$, $\delta p = p_{k+1} - p_k$ be the update to the approximations, then the linear systems that arise within Newton's method are denoted

$$\begin{bmatrix} \mathcal{L}_{1,\vec{u}} & \mathcal{L}_{1,A} & \mathcal{L}_{1,p} \\ \mathcal{L}_{2,\vec{u}} & \mathcal{L}_{2,A} & 0 \\ \mathcal{L}_{3,\vec{u}} & 0 & 0 \end{bmatrix} \begin{bmatrix} \delta\vec{u} \\ \delta A \\ \delta p \end{bmatrix} = - \begin{bmatrix} \mathcal{L}_1 \\ \mathcal{L}_2 \\ \mathcal{L}_3 \end{bmatrix},$$

where each of the system components is evaluated at $\vec{u}_k, A_k, p_k$. That is

$$\begin{aligned}
\mathcal{L}_{1,\vec{u}}[\vec{v}] \cdot \delta\vec{u} &= \frac{\partial}{\partial\vec{u}}(\mathcal{L}_1(\vec{u}_k, A_k, p_k)[\vec{v}])[\delta\vec{u}] = a_1(\delta\vec{u}, \vec{v}) + c_0(\vec{u}_k; \delta\vec{u}, \vec{v}) + c_0(\delta\vec{u}; \vec{u}_k, \vec{v}), \\
\mathcal{L}_{1,A}[\vec{v}] \cdot \delta A &= \frac{\partial}{\partial A}(\mathcal{L}_1(\vec{u}_k, A_k, p_k)[\vec{v}])[\delta A] = \hat{a}(A_k; \vec{v}, \delta A), \\
\mathcal{L}_{1,p}[\vec{v}] \cdot \delta p &= \frac{\partial}{\partial p}(\mathcal{L}_1(\vec{u}_k, A_k, p_k)[\vec{v}])[\delta p] = b(\delta p, \vec{v}), \\
\mathcal{L}_{2,\vec{u}}[\psi] \cdot \delta\vec{u} &= \frac{\partial}{\partial\vec{u}}(\mathcal{L}_2(\vec{u}_k, A_k, p_k)[\psi])[\delta\vec{u}] = \widetilde{c}_2(A_k; \delta\vec{u}, \psi), \\
\mathcal{L}_{2,A}[\psi] \cdot \delta A &= \frac{\partial}{\partial A}(\mathcal{L}_2(\vec{u}_k, A_k, p_k)[\psi])[\delta A] = \widetilde{a}_2(\delta A, \psi) + \widetilde{c}_2(\delta A; \vec{u}_k, \psi), \\
\mathcal{L}_{3,\vec{u}}[q] \cdot \delta\vec{u} &= \frac{\partial}{\partial\vec{u}}(\mathcal{L}_3(\vec{u}_k, A_k, p_k)[q])[\delta\vec{u}] = b(q, \delta\vec{u}),
\end{aligned}$$

where

$$\begin{aligned}
\hat{a}(A_k; \vec{v}, A) := &\left\langle \left(\frac{\partial A_k}{\partial y} \cdot \frac{\partial A}{\partial y} - \frac{\partial A_k}{\partial x} \cdot \frac{\partial A}{\partial x}, -\left[\frac{\partial A_k}{\partial x} \cdot \frac{\partial A}{\partial y} + \frac{\partial A}{\partial x} \cdot \frac{\partial A_k}{\partial y} \right] \right), \frac{\partial \vec{v}}{\partial x} \right\rangle_0 \\
&+ \left\langle \left(-\left[\frac{\partial A_k}{\partial x} \cdot \frac{\partial A}{\partial y} + \frac{\partial A}{\partial x} \cdot \frac{\partial A_k}{\partial y} \right], \frac{\partial A_k}{\partial x} \cdot \frac{\partial A}{\partial x} - \frac{\partial A_k}{\partial y} \cdot \frac{\partial A}{\partial y} \right), \frac{\partial \vec{v}}{\partial y} \right\rangle_0 .
\end{aligned}$$

Define the following forms:

$$\begin{aligned}
\mathfrak{A}(U_k; U, W) &:= \hat{a}(A_k; \vec{v}, A) + a_1(\vec{u}, \vec{v}) + \widetilde{a}_2(A, \psi) + c_0(\vec{u}_k; \vec{u}, \vec{v}) + c_0(\vec{u}; \vec{u}_k, \vec{v}) + \widetilde{c}_2(A_k; \vec{u}, \psi) + \widetilde{c}_2(A; \vec{u}_k, \psi), \\
\mathfrak{B}(W, q) &:= b(q, \vec{v}), \\
F(U_k, p_k; W) &:= \widetilde{\mathcal{L}}(\vec{v}, \psi) - \widetilde{\mathcal{A}}(\vec{u}_k, A_k; \vec{v}, \psi) - \widetilde{\mathcal{C}}(\vec{u}_k, A_k; \vec{u}_k, A_k; \vec{v}, \psi) - \widetilde{\mathcal{B}}(p_k; \vec{v}, \psi), \\
G(U_k; q) &:= -\mathfrak{B}(U_k, q).
\end{aligned}$$

For Newton's method applied in a linearize-then-discretize formulation, we consider the finite-element spaces $\mathbf{S}_h = \mathbf{W}_h \times \mathbf{X}_h \subset \mathbf{S}$ and $\mathbf{Q}_h \subset \mathbf{Q}$. Given an approximation, $(U_{h,k}, p_{h,k}) \in \mathbf{S}_h \times \mathbf{Q}_h$, the discrete Newton update is given by

Formulation 4. *Find $(\delta U_h, \delta p_h) \in \mathbf{S}_h \times \mathbf{Q}_h$ such that*

$$\mathfrak{A}(U_{h,k}; \delta U_h, W_h) + \mathfrak{B}(W_h, \delta p_h) = F(U_{h,k}, p_{h,k}; W_h), \tag{35}$$

$$\mathfrak{B}(\delta U_h, q_h) = G(U_{h,k}; q_h), \tag{36}$$

for all $(W_h, q_h) \in \mathbf{S}_h \times \mathbf{Q}_h$. Let $U_{h,k+1} = U_{h,k} + \delta U_h$, $p_{h,k+1} = p_{h,k} + \delta p_h$.

For simplicity, throughout the remainder of this section, we drop the subscript h. Since we consider finite-element approximations $\vec{u}_k$ and A_k, we denote $C_{sup} = \sup_{(x,y)\in\Omega} |\nabla\vec{u}_k|$, $D_{sup} = \sup_{(x,y)\in\Omega} |\nabla A_k|$, and $M_{sup} = \sup_{(x,y)\in\Omega} |\vec{u}_k|$, and note that they are all finite quantities.

Remark 4.1. Assuming Newton's method is convergent, the approximation on $\mathcal{T}_h$ converges to the true discrete solution as $k \to \infty$, so these constants, C_{sup}, D_{sup}, and M_{sup}, stay well-behaved under assumptions on the solution.

Lemma 4.1. *$\mathfrak{A}(U_k; U, W)$ and $\mathfrak{B}(W, q)$ are continuous on $\mathbf{S}_h$ and $\mathbf{Q}_h$ for the norms $\|\cdot\|_1$ and $\|\cdot\|_0$.*

Proof. For the continuity of $\mathfrak{A}(U_k; U, W)$, observe that

$$|\mathfrak{A}(U_k; U, W)| \le |\hat{a}(A_k; \vec{v}, A) + a_1(\vec{u}, \vec{v}) + \widetilde{a}_2(A, \psi) + c_0(\vec{u}_k; \vec{u}, \vec{v}) + c_0(\vec{u}; \vec{u}_k, \vec{v}) + \widetilde{c}_2(A_k; \vec{u}, \psi) + \widetilde{c}_2(A; \vec{u}_k, \psi)|.$$

Next, consider the above summands separately. First, note that

$$|\hat{a}(A_k; \vec{v}, A)| \le 2D_{sup}\|\nabla A\|_0\|\nabla\vec{v}\|_0.$$

Recalling the definitions of the rest of these terms, we obtain the following estimates

$$\begin{aligned}
|a_1(\vec{u},\vec{v})| &\le CR_e^{-1}\|\vec{u}\|_1\|\vec{v}\|_1,\\
|\widetilde{a}_2(A,\psi)| &\le Re_m^{-1}\|A\|_1\|\psi\|_1,\\
|c_0(\vec{u}_k;\vec{u},\vec{v})| &\le \frac{M_{sup}}{2}\left(\||\nabla\vec{u}\|_0\|\vec{v}\|_0+\|\vec{u}\|_0\|\nabla\vec{v}\|_0\right),\\
|c_0(\vec{u};\vec{u}_k,\vec{v})| &\le \frac{1}{2}\left(C_{sup}\|\vec{u}\|_0\|\vec{v}\|_0+M_{sup}\|\vec{u}\|_0\|\nabla\vec{v}\|_0\right),\\
|\widetilde{c}_2(A_k;\vec{u},\psi)| &\le D_{sup}\|\vec{u}\|_0\|\psi\|_0,\\
|\widetilde{c}_2(A;\vec{u}_k,\psi)| &\le M_{sup}\|\nabla A\|_0\|\psi\|_0.
\end{aligned}$$

An application of the Cauchy–Schwarz inequality shows that

$$|\mathfrak{A}(U_k;U,W)| \le C\|U\|_1\|W\|_1,$$

where C is a constant depending on C_{sup}, D_{sup}, M_{sup}, Re and Re_m.

Continuity of $\mathfrak{B}(W,q)$ holds by standard arguments. □

Lemma 4.2. *$F(U_k,p_k;W)$ and $G(U_k;q)$ are bounded linear functionals on $\mathbf{S}_h$ and $\mathbf{Q}_h$, respectively.*

Proof. The components of $F(U_k,p_k;W)$ can be bounded as in the proof of Lemma 4.1. Since, additionally,

$$\begin{aligned}
|\langle E^0,\psi\rangle_0| &\le \|E^0\|_0\|\psi\|_0,\\
|\langle\vec{f},\vec{v}\rangle| &\le \|\vec{f}\|_{-1}\|\vec{v}\|_1,
\end{aligned}$$

and $b(q,\vec{v})$ is continuous, we have

$$|F(U_k,p_k;W)| \le C\|W\|_1,$$

where C is a constant only depending on the norms of U_k and p_k.

By Hölder's inequality, we have

$$|G(U_k;q)| = |-\mathfrak{B}(U_k,q)| \le \|U_k\|_1\|q\|_0,$$

implying that $G(U_k;q)$ is bounded. □

To illustrate the existence and uniqueness of solutions to the system given by (35) and (36), we now give conditions under which $\mathfrak{A}(U_k;U,W)$ is a coercive and continuous bilinear form. When $\mathfrak{B}(W,q)$ is continuous and weakly coercive in the chosen finite-element spaces, existence and uniqueness of solutions to the discretized Newton linearization is automatic.

Theorem 4.1. *Let Re and Re_m be small enough such that*

$$\min\left\{\alpha_1 Re^{-1},\alpha_2 Re_m^{-1}\right\}-\frac{2C_{sup}+6D_{sup}+5M_{sup}}{4}>0,$$

where α_1,α_2 are constants defined below, and C_{sup}, D_{sup}, and M_{sup} are as given above. Then, there exists a constant $\gamma>0$ depending on U_k and Ω such that

$$\mathfrak{A}(U_k;W,W)\ge\gamma\|W\|_1^2,\quad\forall W\in\mathbf{S}_h. \tag{37}$$

Proof. By standard arguments,

$$\langle\nabla\vec{v}+\nabla\vec{v}^T,\nabla\vec{v}\rangle_0\ge\alpha_1\|\vec{v}\|_1^2,\quad\forall\vec{v}\in\mathbf{W}_h,$$

where α_1 is a constant depending only on Ω (see [6], Corollary 11.2.22) and

$$\langle\nabla\psi,\nabla\psi\rangle_0\ge\alpha_2\|\psi\|_1^2,\quad\forall\psi\in\mathbf{X}_h,$$

where α_2 depends only on Ω (see the Poincaré inequality [6]).

The remaining terms in $\mathfrak{A}(U_k;W,W)$ can be bounded as in the proof of Lemma 4.1, giving

$$\begin{aligned}
\mathfrak{A}(U_k;W,W) &\ge \alpha_1 Re^{-1}\|\vec{v}\|_1^2+\alpha_2 Re_m^{-1}\|\psi\|_1^2-2D_{sup}\|\nabla\psi\|_0\|\nabla\vec{v}\|_0\\
&\quad -M_{sup}\|\vec{v}\|_0\|\nabla\vec{v}\|_0-\frac{C_{sup}}{2}\|\vec{v}\|_0^2-\frac{M_{sup}}{2}\|\vec{v}\|_0\|\nabla\vec{v}\|_0-D_{sup}\|\vec{v}\|_0\|\psi\|_0-M_{sup}\|\nabla\psi\|_0\|\psi\|_0\\
&\ge \min\{\alpha_1 Re^{-1},\alpha_2 Re_m^{-1}\}\|W\|_1^2-\frac{2C_{sup}+6D_{sup}+5M_{sup}}{4}\|W\|_1^2\\
&= (\gamma_1-\gamma_2)\|W\|_1^2,
\end{aligned}$$

where $\gamma_1=\min\{\alpha_1 Re^{-1},\alpha_2 Re_m^{-1}\}$, $\gamma_2=(2C_{sup}+6D_{sup}+5M_{sup})/4$. Let $\gamma=\gamma_1-\gamma_2>0$. Thus, $\mathfrak{A}(U_k;W,W)$ is coercive. □

Remark 4.2. Since the Poincaré inequality applies for $\psi \in \widetilde{\mathbf{X}}_0$, the coercivity bound will also hold for the appropriate finite-element space in the case of perfect conductor boundary conditions.

Assumption 2. There exists a constant $\Gamma_s > 0$ depending on Ω such that

$$\inf_{0\neq q\in \mathbf{Q}_h} \sup_{\vec{0}\neq\vec{v}\in\mathbf{W}_h} \frac{b(q,\vec{v})}{\|\vec{v}\|_1\|q\|_0} \geq \Gamma_s > 0. \tag{38}$$

Remark 4.3. The major difference between (23) and (38) is that the inf–sup condition must be satisfied on the discrete space. There is, however, no restriction on the discrete space chosen to approximate A. Choosing a pair of spaces for which the discrete inf–sup condition (38) holds is well-known to be a delicate matter, and seemingly natural choices of velocity and pressure approximation do not always work [16]. For example, the simplest globally continuous approximations, using linear or bilinear elements for both velocity and pressure on triangles or quadrilaterals, respectively (the so-called P_1-P_1 and Q_1-Q_1 approximations), are unstable. In general, care must be taken to make the velocity space rich enough compared to the pressure space, otherwise the discrete solution will be "over-constrained". Any stable element pair for the Navier–Stokes equations (e.g., P_2-P_1 or Q_2-Q_1 Taylor–Hood elements) can be used for $\vec{u}$ and p (see [9,13,16,17]) to satisfy (38).

Theorem 4.2. *Under the assumptions of Theorem 4.1 and Assumption 2, there is a unique solution to Formulation 4.*

Proof. Following Theorem 1.2 of [9, Chapter III], Lemmas 4.1 and 4.2, and Theorem 4.1 prove the result. □

4.2. Solvability of stabilized discretizations

In this subsection, we give a solvability condition for stabilized finite-element methods, since our analysis is also suitable for this setting. From Formulation 4, the matrix equations that result from a stabilized finite-element discretization have the following block form:

$$\mathcal{M}x = \begin{bmatrix} K & Z & B \\ Y & D & 0 \\ B^T & 0 & -T \end{bmatrix} \begin{bmatrix} x_{\vec{u}} \\ x_A \\ x_p \end{bmatrix} = \begin{bmatrix} \mathfrak{f}_{\vec{u}} \\ \mathfrak{f}_A \\ \mathfrak{f}_p \end{bmatrix}, \tag{39}$$

where $x_{\vec{u}}$, x_A, and x_p are the discrete Newton corrections for $\vec{u}$, A, and p, respectively, and $\mathfrak{f}_{\vec{u}}$, $\mathfrak{f}_A$, and $\mathfrak{f}_p$ are the corresponding blocks of the residual, while T is the stabilization term.

Let

$$\hat{K} = \begin{bmatrix} K & Z \\ Y & D \end{bmatrix}, \hat{B} = \begin{bmatrix} B \\ 0 \end{bmatrix}, x_{\hat{\vec{u}}} = \begin{bmatrix} x_{\vec{u}} \\ x_A \end{bmatrix}, \mathfrak{f}_{\hat{\vec{u}}} = \begin{bmatrix} \mathfrak{f}_{\vec{u}} \\ \mathfrak{f}_A \end{bmatrix}.$$

Then, Eq. (39) can be rewritten as

$$\mathcal{M}x = \begin{bmatrix} \hat{K} & \hat{B} \\ \hat{B}^T & -T \end{bmatrix} \begin{bmatrix} x_{\hat{\vec{u}}} \\ x_p \end{bmatrix} = \begin{bmatrix} \mathfrak{f}_{\hat{\vec{u}}} \\ \mathfrak{f}_p \end{bmatrix}, \tag{40}$$

where $\hat{K} \in \mathbb{R}^{n\times n}$, $\hat{B} \in \mathbb{R}^{n\times m}$, $\mathfrak{f}_{\hat{\vec{u}}} \in \mathbb{R}^n$, $\mathfrak{f}_p \in \mathbb{R}^m$ and $m \leq n$.

Lemma 4.3. *Under the assumptions of Theorem 4.1, $\hat{K}$ is positive definite.*

Proof. This is a consequence of (37). □

With homogeneous Dirichlet boundary conditions on $\vec{v} \in \mathbf{W}$, $b(p,\vec{v}) = 0$ for all $\vec{v} \in \mathbf{W}$ implies that the pressure, p, is a constant. When using a nodal finite-element basis, $\mathrm{Span}\{\vec{1}\} \subset \mathrm{Ker}(B)$ is a natural consequence of this. If the two spaces are equal, the resulting pressure is unique up to constants. When a discrete inf–sup condition (as in (38)) does not hold, $\mathrm{Ker}(B) \neq \mathrm{Span}\{\vec{1}\}$. However, we have the following condition that guarantees the solvability of the stabilized method, and gives insight into the construction of T.

Theorem 4.3. *Under the assumptions of Theorem 4.1, let $S = -(T + \hat{B}^T\hat{K}^{-1}\hat{B})$ be the Schur complement of $\hat{K}$ in $\mathcal{M}$, with T symmetric and positive semidefinite. If $\mathrm{Ker}(T) \cap \mathrm{Ker}(B) \subseteq \mathrm{Span}\{\vec{1}\}$, then $\mathrm{Ker}(S) \subseteq \mathrm{Span}\{\vec{1}\}$.*

Proof. Since $\hat{K}$ is positive definite, $\hat{K}^{-1}$ is also positive definite. This implies that $p^T\hat{B}^T\hat{K}^{-1}\hat{B}p \geq 0$ with equality if and only if $Bp = 0$. On the other hand, because T is symmetric positive semidefinite, $\mathrm{Ker}(S) = \mathrm{Ker}(T) \cap \mathrm{Ker}(B)$. □

This theorem tells us that (40) is well-posed if the stabilized pressure Schur Complement, S, is a positive semi-definite matrix with the following stability condition:

$$\mathrm{Ker}(S) \subseteq \mathrm{Span}\{\vec{1}\}.$$

The important consequence of Theorem 4.3 is that any stabilization approach that is suitable for the Stokes equations is also suitable in this context, since $\hat{K}$ does not enter the intersecting kernels condition. In particular, standard approaches for equal-order $Q_1 - Q_1$ approximations of velocity and pressure can be used, including diffusion stabilization and pressure-projection [16,18]. Thus, the analysis above can be applied to discretization approaches similar to those in [5], which uses diffusion-type stabilization of the pressure equation (although we note that [5] also makes use of additional stabilization for the case when the Reynolds numbers are not small, which is not considered here). Based on the above discussions, we give the natural result.

Theorem 4.4. *Under the assumptions of Theorem 4.3, the stabilized discrete Newton approximation of Formulation 3 yields a unique solution with a pressure that is unique up to constants.*

We note here that, for both the stable and stabilized cases, the assumptions of Theorem 4.1 could be relaxed with the use of appropriate stabilized finite-elements for the convection–diffusion parts of the weak form, as was done in [5]. The general conclusions of Theorems 4.2 and 4.4 would naturally still hold in this case, notably that any standard mixed finite-element space for Stokes or Navier–Stokes can be used for the velocity and pressures, and an independent choice can be made for the potential, A.

4.3. Solvability of Newton Linearizations

Finally, under much more restrictive assumptions, we show that the Newton linearizations are always solvable in a neighbourhood of a discrete solution, by proving coercivity of $\mathfrak{A}(U; W, W)$. While this is not sufficient to guarantee that Newton's method converges to the solution, it strongly suggests such a result, given the usual expectation of locally quadratic convergence of Newton's method.

Define $\|U\|_{1,\infty} := \max\{\|\vec{u}\|_{1,\infty}, \|A\|_{1,\infty}\}$ and $\mathbf{D}(U; r) = \{W : \|W - U\|_1 < r\}$ and assume the following.

Assumption 3. Assume the conditions of Corollary 3.1 hold; furthermore, assume the solution U_h^* of Formulation 3 satisfies

$$\kappa_h^* = \|U_h^*\|_{1,\infty} < \frac{\gamma_1}{4},$$

where $\gamma_1 = \min\{\alpha_1 Re^{-1}, \alpha_2 Re_m^{-1}\}$ is from Theorem 4.1.

Theorem 4.5. *There exists $r > 0$ such that $\mathfrak{A}(U; W, W)$ is always coercive for any $U \in \mathbf{D}(U_h^*; r)$.*

Proof. Recalling constants γ_1, γ_2 from the proof of Theorem 4.1,

$$\gamma_2 = (2C_{sup} + 6D_{sup} + 5M_{sup})/4 < 4 \cdot \max\{C_{sup}, D_{sup}, M_{sup}\} < 4\|U_k\|_{1,\infty},$$

gives

$$\mathfrak{A}(U_k; W, W) > (\gamma_1 - 4\|U_k\|_{1,\infty})\|W\|_1^2.$$

Thus, if $\|U_k\|_{1,\infty} < \frac{\gamma_1}{4}$, then $\mathfrak{A}(U_k; W, W)$ is coercive.

According to the standard inverse inequality [6, Theorem IV.5.11],

$$\|U_h^*\|_{1,\infty} \le C^* h^{-1} \|U_h^*\|_1,$$

where C^* is a constant. By the triangle inequality, for any r and $W \in \mathbf{D}(U_h^*; r) \cap \mathbf{S}_h$, we have

$$\begin{aligned} \|U\|_{1,\infty} &\le \|U_h^*\|_{1,\infty} + \|U - U_h^*\|_{1,\infty} \\ &\le \kappa_h^* + C^* h^{-1} \|U - U_h^*\|_1 \\ &\le \kappa_h^* + C^* h^{-1} r. \end{aligned}$$

Taking $r = \frac{h(\gamma_1/4 - \kappa_h^*)}{C^*}$, $\mathfrak{A}(U; W, W)$ is, thus, coercive if $U \in \mathbf{D}(U_h^*; r)$. □

5. Numerical results

To demonstrate both the finite-element convergence and performance of Newton's method for this formulation, we consider the Hartmann flow test problem on the domain $\left[-\frac{1}{2}, \frac{1}{2}\right]^2$. For this problem, we have an analytical solution, given by $\vec{u} = (u_1, 0)$ and $\vec{B} = (B_1, B_2)$ with

$$u_1(x, y) = \frac{1}{2\tanh(Ha/2)} \sqrt{\frac{Re}{Re_m}} \left(1 - \frac{\cosh(yHa)}{\cosh(Ha/2)}\right),$$

$$B_1(x, y) = \frac{\sinh(yHa)}{2\sinh(Ha/2)} - y,$$

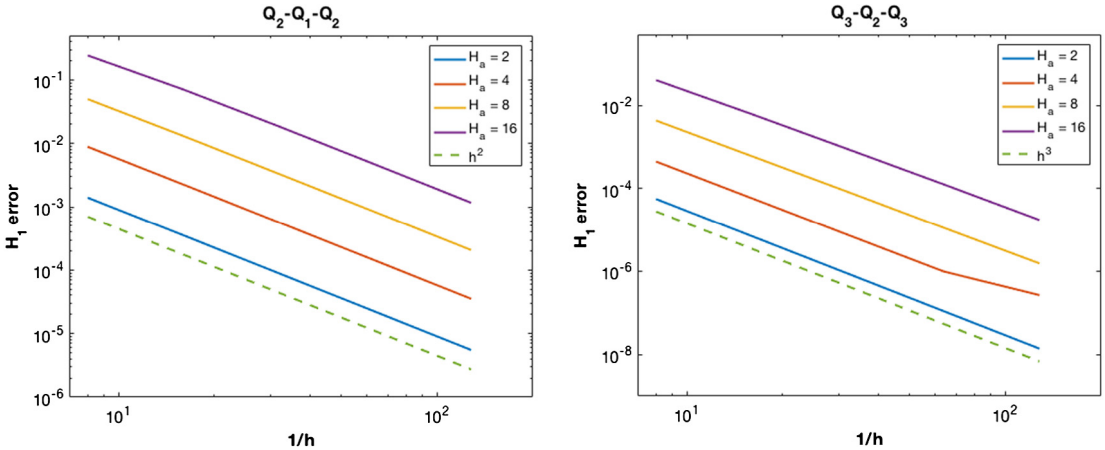

Fig. 2. H^1 approximation error, $\left(\|\vec{u}-\vec{u}_h\|_1^2+\|A-A_h\|_1^2\right)^{1/2}$, for finite-element solution of Hartmann test problem on uniform quadrilateral meshes with meshwidth h. At left, error for approximation with velocities and potential in Q_2 and pressure in Q_1, at right, error for approximation with velocities and potential in Q_3 and pressure in Q_2.

$$B_2(x,y)=1,$$
$$p(x,y)=-x-\frac{1}{2}\left(B_1(x,y)\right)^2,$$

where the Hartmann number is given by $Ha=\sqrt{ReRe_m}$. Increasing Ha leads to increased coupling between the velocity and magnetic field components of the solution, which is seen in [4] to lead to difficulties with some preconditioners for the discretized and linearized equations. In the numerical results that follow, we fix $Re=Re_m=Ha$. From this expression, we compute $A(x,y)$ such that $B_1(x,y)=\frac{\partial A}{\partial y}$ and $B_2(x,y)=-\frac{\partial A}{\partial x}$. For this solution, we have non-homogeneous conductor boundary conditions on $\vec{B}$, which we implement with suitable non-homogeneous Dirichlet boundary conditions on $A(x,y)$.

Fig. 2 shows finite-element convergence for this problem with varying Ha and mesh-size h. We solve the problem using a linearize-then-discretize formulation, starting from an initial guess that matches the non-homogeneous Dirichlet boundary conditions, but is zero for all variables inside the domain. The discretization is done in deal.II [19,20], with each linearization solved using a direct solver (UMFPACK [21]), and the nonlinear iteration stopped when the vector ℓ^2-norm, scaled by the mesh-size h, of the nonlinear residual or that of the Newton update is less than 10^{-8}. These results are presented in the setting of Corollary 3.1, using (generalized) Taylor–Hood elements for the velocity and pressure, and matching the degree of the velocity space for the potential. The numerical results presented here agree quite well with Corollary 3.1, with $\mathcal{O}(h^2)$ errors observed for approximation of velocities and potential in Q_2 and pressure in Q_1 and $\mathcal{O}(h^3)$ errors observed for approximation with velocities and potential in Q_3 and pressure in Q_2. For the range of Hartmann numbers considered in these figures, no difficulties are seen with convergence either of the nonlinear iteration or the finite-element approximations; convergence is seen within 4 to 7 Newton steps for all Hartmann numbers and all meshes. For larger Hartmann numbers, we did observe convergence issues with Newton's method.

6. Conclusions

In this paper, we present a theoretical analysis of the weak formulations of a steady-state visco-resistive vector-potential MHD formulation. Under certain conditions, we prove the uniqueness and existence of the solutions. Furthermore, we show that the solutions of the curled and uncurled formulations are the same, under some conditions. From this point of view, using the uncurled formulation to approximate the MHD problem is reasonable and meaningful. A mixed finite-element approximation of the uncurled formulation is discussed. The convergence rates obtained under some standard smoothness assumptions have been analysed, and we show that it is a suitable option. Thus, using Newton stepping and a stable Stokes finite-element method pair plus any space for A yields a suitable solution scheme for two-dimensional MHD.

Acknowledgements

This work was partially supported by NSF, USA grant DMS-1216972. The work of SM and YH was partially supported by an NSERC, Canada discovery grant.

References

[1] J.P. Goedbloed, S. Poedts, Principles of Magnetohydrodynamics: with Applications to Laboratory and Astrophysical Plasmas, Cambridge University Press, 2004.
[2] M.D. Gunzburger, A.J. Meir, J.S. Peterson, On the existence, uniqueness, and finite element approximation of solutions of the equations of stationary, incompressible magnetohydrodynamics, Math. Comp. 56 (194) (1991) 523–563.
[3] D. Schötzau, Mixed finite element methods for stationary incompressible magneto–hydrodynamics, Numer. Math. 96 (4) (2004) 771–800.
[4] J.H. Adler, T.R. Benson, E. Cyr, S.P. MacLachlan, R.S. Tuminaro, Monolithic multigrid methods for two-dimensional resistive magnetohydrodynamics, SIAM J. Sci. Comput. 38 (1) (2016) B1–B24.
[5] E.C. Cyr, J.N. Shadid, R.S. Tuminaro, R.P. Pawlowski, L. Chacón, A new approximate block factorization preconditioner for two-dimensional incompressible (reduced) resistive MHD, SIAM J. Sci. Comput. 35 (3) (2013) B701–B730.
[6] S. Brenner, R. Scott, The Mathematical Theory of Finite Element Methods, Springer Science & Business Media, 2007.
[7] F. Assous, P. Ciarlet, E. Sonnendrücker, Resolution of the Maxwell equations in a domain with reentrant corners, ESAIM Math. Model. Numer. Anal. 32 (3) (1998) 359–389.
[8] M.-C. Shaw, Boundary values problems on Lipschitz domains in $\mathbb{R}^n$ or $\mathbb{C}^n$, Contemp. Math. 368 (2005) 375–404.
[9] V. Girault, P.-A. Raviart, Finite Element Methods for Navier-Stokes Equations: Theory and Algorithms, Springer Science & Business Media, 2012.
[10] P.G. Ciarlet, The Finite Element Method for Elliptic Problems, Society for Industrial and Applied Mathematics, Philadelphia, PA, 2002, p. xxviii+530.
[11] P. Grisvard, Singularities in Boundary Value Problems, vol. 22, Springer, 1992.
[12] R.A. Adams, J.J. Fournier, Sobolev Spaces, Academic Press, 2003.
[13] D. Boffi, F. Brezzi, M. Fortin, Mixed Finite Element Methods and Applications, in: Springer Series in Computational Mathematics, Springer, Heidelberg, 2013, p. xiv+685.
[14] M. Benzi, G.H. Golub, J. Liesen, Numerical solution of saddle point problems, Acta Numer. (2005) 1–137.
[15] F. Brezzi, M. Fortin, Mixed and Hybrid Finite Element Methods, Springer Science & Business Media, 2012.
[16] H.C. Elman, D.J. Silvester, A.J. Wathen, Finite Elements and Fast Iterative Solvers: with Applications in Incompressible Fluid Dynamics, second ed., Numerical Mathematics and Scientific Computation, Oxford University Press, Oxford, 2014, p. xiv+479.
[17] M. Fortin, Old and new finite elements for incompressible flows, Internat. J. Numer. Methods Fluids 1 (4) (1981) 347–364.
[18] C.R. Dohrmann, P.B. Bochev, A stabilized finite element method for the Stokes problem based on polynomial pressure projections, Internat. J. Numer. Methods Fluids 46 (2) (2004) 183–201.
[19] W. Bangerth, T. Heister, G. Kanschat, et al., `deal.II` Differential Equations Analysis Library, Technical Reference, http://www.dealii.org.
[20] W. Bangerth, R. Hartmann, G. Kanschat, deal.II – A general purpose object oriented finite element library, ACM Trans. Math. Software 33 (4) (2007) 24/1–24/27.
[21] T.A. Davis, Algorithm 832: UMFPACK V4.3—an unsymmetric-pattern multifrontal method, ACM Trans. Math. Software 30 (2) (2004) 196–199.

Please cite this article in press as: J.H. Adler, et al., Vector-potential finite-element formulations for two-dimensional resistive magnetohydrodynamics, Computers and Mathematics with Applications (2018), https://doi.org/10.1016/j.camwa.2018.09.051.