Jadon Tsai
tsaijado
1010870283
Word Count: 1000

1 Self Rating

Key Competency: 2.2 - Utilizing sensors, actuators and microcontrollers to build functional sensing and actuation systems. Self Rating: 3

2 Competency-Based Assessment

2.1 Situation

For Phase 3, our team specifically wanted people to work in areas they had no previous experience in. This meant that I was responsible for developing most of the electronics, since my prior knowledge of electronics was limited to pretty much just lectures. While I was able to build most components independently, there were 2 components that I had issues with: the MG996R servo motors [1] and the AM2320 temperature sensors [2], neither of which I could get to work.

2.2 Action Taken

I was unable to debug these issues on my own, so I asked my more experienced teammates. They spotted my issues pretty quickly. The temperature sensors required pullup resistors, and I didn't check the datasheet on how they worked. As can be seen in figure 1, I should have checked it.

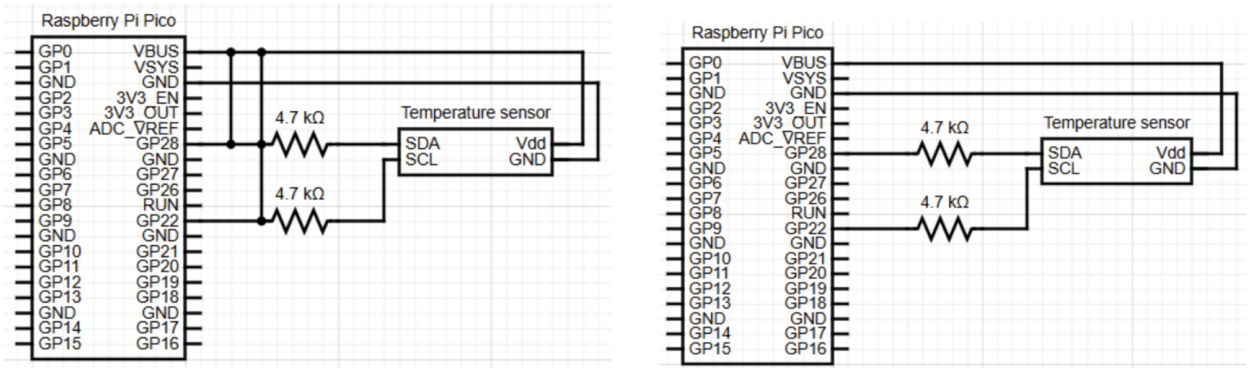

Figure 1: Left: what the pullup resistors are actually supposed to do ("pull" the pins high from VBUS). Right: how I wired it (in this configuration they are genuinely useless).

In the second example, I was trying to figure out why the motors did not move. The datasheet [1] said that they were 5V motors, and I assumed that we could use the 5V from the pico, which I later learned is not how that works (the pico cannot work at the higher currents that the motor works at). We eventually got battery packs and redesigned the prototype. From these experiences, my role in the team was to be a learner; I did a fair amount of independent design work, but a big part of my role was to shut up and absorb knowledge.

2.3 Outcomes

The immediate result of these actions was a fully functional electronics subsystem. In our overall design process, talking to teammates to resolve these issues helped me remove (my self-created) blocker. In terms of less technical results, this helped our team dynamic, because it helped us prioritize collective skill development, which improved collaboration and our individual engineering skills. In terms of my own competency development, while I could independently build some sensing and actuation systems, I couldn't make all design decisions fully independently, as I need to check in with more experienced teammates to help me debug. This aligns with a level 3, where I can work independently on moderately complex tasks but still require occasional guidance to ensure that things work.

3 Analysis & Next Steps

3.1 Key Takeaways

My development in this competency is not just technical; it's also strongly linked to how I work in a team. Given my limited prior experience, I made an intentional decision to focus on listening and asking targeted questions from more knowledgeable sources. This allowed me to identify and correct gaps in my knowledge more efficiently. One nice side effect of this was that it contributed to our team value centred around shared learning. While I relied on others for guidance in electronics, I provided guidance in areas where I had stronger competency. This created an exchange of knowledge, which sped up our design process, and also made us individually better engineers.

My approach to debugging and learning in general was reactive; I identified knowledge gaps only after messing up. While adopting a learner role was effective for skill acquisition, it also shows that I don't have the complete independence and foresight expected at a level 4. Therefore, my current abilities line up with a level 3; I am able to take some responsibility for implementing and debugging sensing and actuation systems, and I am able to contribute meaningfully towards a design, but I still depend on guidance sometimes to ensure things work.

3.2 Next Steps

The most immediate thing I can do to improve my competency is to improve my theoretical understanding of embedded systems. I would specifically like to learn more about communications protocols and power distribution, since those are the two aspects that I made mistakes on. While I have learned about them in a classroom before, I would like to change my approach to learning. Rather than treating them as isolated concepts, I should focus on understanding how they work together in systems, and on their real-world implementation issues. Tying it back to the situation, I would focus on learning more on the design reasons why the pico doesn't like powering motors, rather than just thinking "5 volts = 5 volts". Before design time in personal projects or design teams, I will intentionally take some time to learn about aspects that I am currently unfamiliar with that I will be working with.

Another more concrete step I can take is in my approach to prototyping. I am currently on a design team that will build a spinning droplet generator this summer, so I'll apply my

next steps in that context. I want to plan for more prototyping time than I would need, specifically to test subsystems before integration. For example, I would be designing around a BLDC motor, and I have no clue how those work. Taking time to understand it beforehand would allow me to make design decisions independently. I will prioritize exhausting my own reasoning and validation processes first to build confidence in my decisions. For this case specifically, that motor is pretty expensive, so I will definitely seek validation before actually running any tests of my design, but I will approach it as a final completion check rather than a stage of debugging.

I will also refine how I adopt the "learner" role within a team. While this approach was effective for acquiring new skills and moving from a level 2 to a 3, I should aim to transition toward a more balanced role where I both learn and also independently validate technical decisions. This is a requirement if I want to move to a level 4; I have to be able to take on "significant" responsibility in design decisions. At the same time, I will continue contributing to team learning in areas where I have stronger expertise, which will help me practice my skills in leadership in a team, and eventually down the line help me move to a level 5 in this particular competency by being able to "mentor other students".

References

[1] Components101. Mg996r servo motor datasheet, wiring diagram & features, 2019. Accessed: 2026-04-08.

[2] Adafruit Industries. Am2320 digital temperature and humidity sensor (product id: 3721). `https://www.adafruit.com/product/3721`, 2018. Accessed: 2026-04-03.