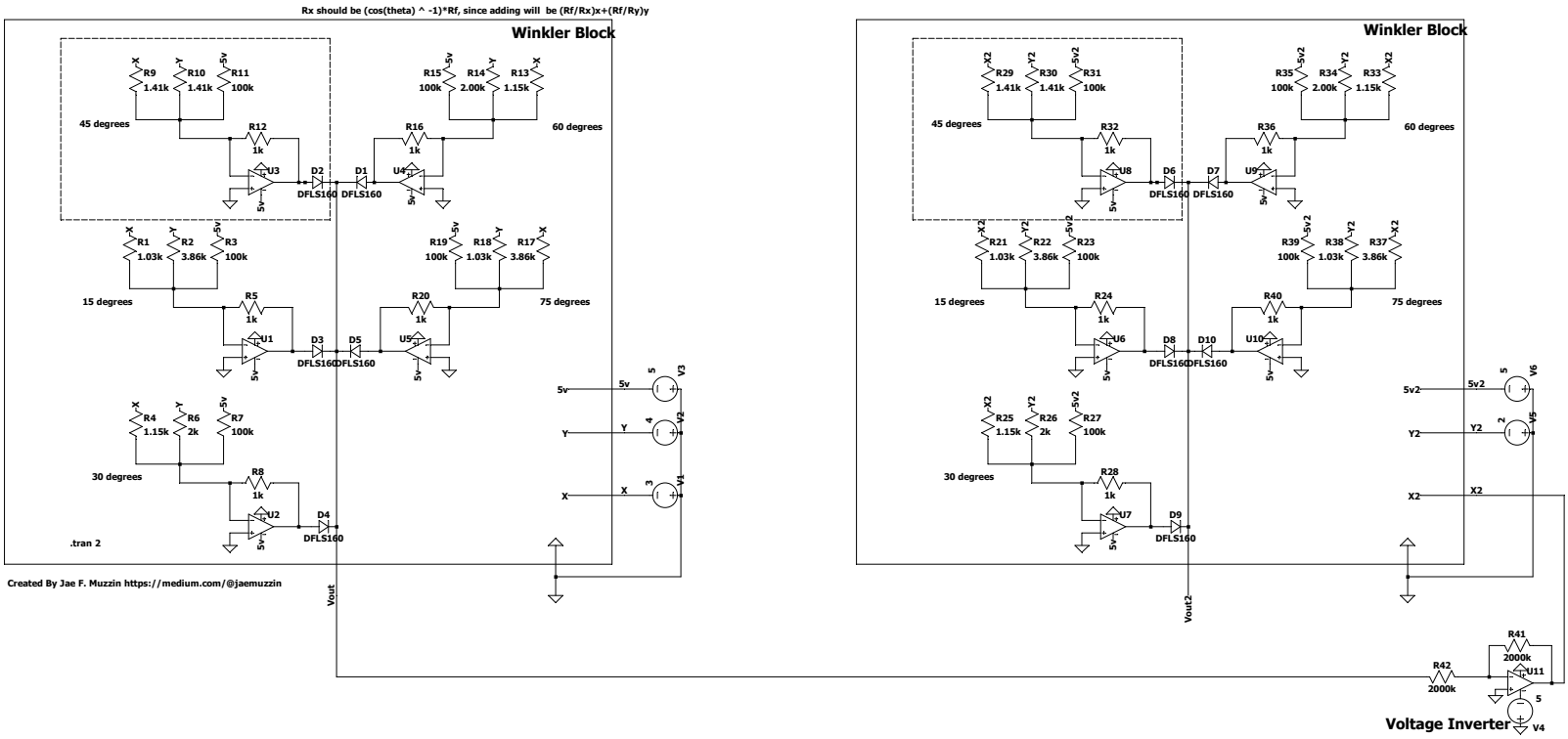

--- C:\Users\Admin\Documents\winkler.asc ---