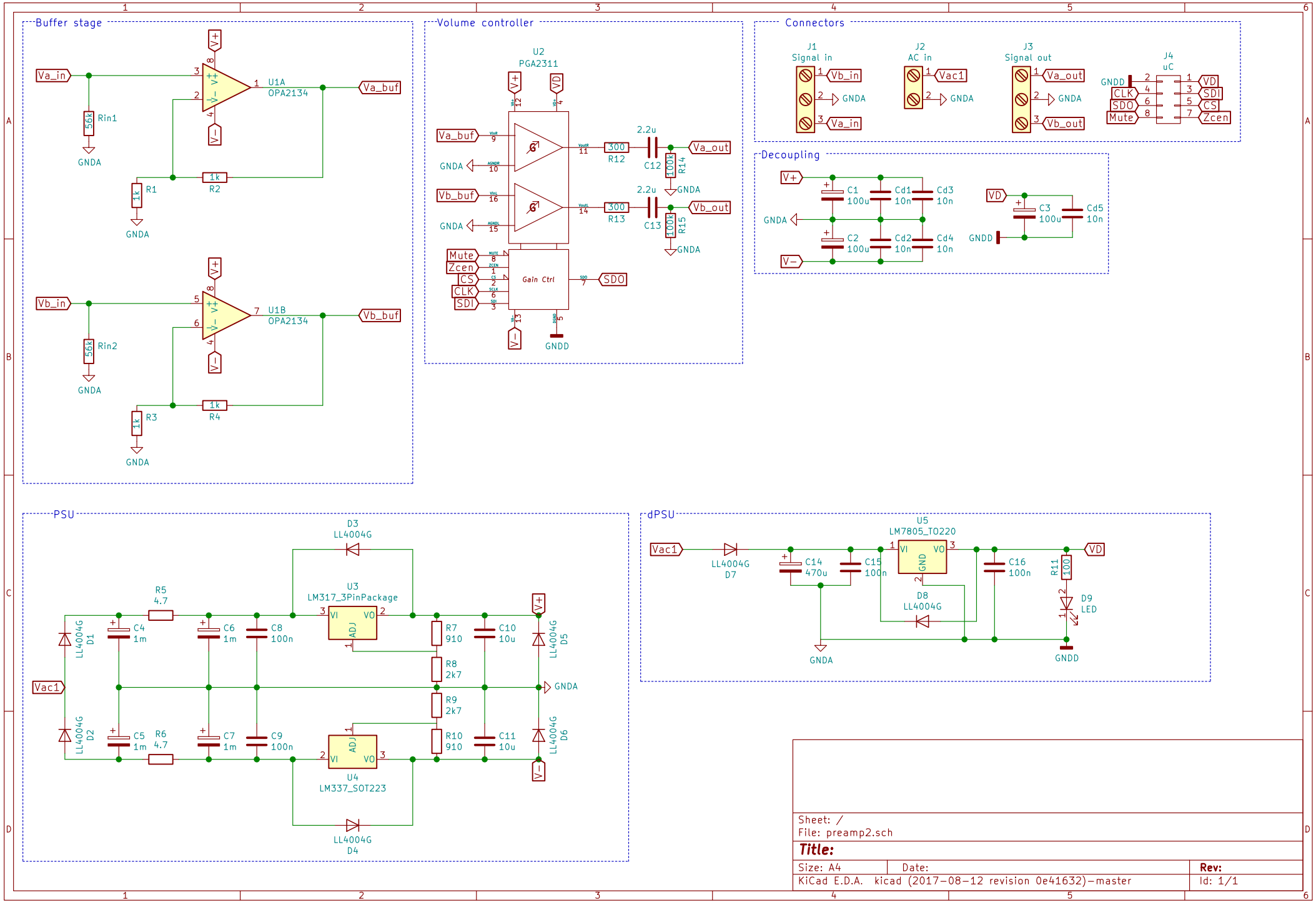

Sheet: /
File: preamp2.sch

Title:

Size: A4	Date:	Rev:
KiCad E.D.A. kicad (2017-08-12 revision 0e41632)-master		Id: 1/1