PART-B ESSAY QUESTIONS WITH SOLUTIONS

4.1 GEOTHERMAL EERGY

4.1.1 Resources

Q25. What is meant by geothermal energy?

Answer :

Geothermal Energy

Geothermal energy is heat transported from the interior of the earth. It is recoverable in some form such as steam or hot water.

The earth is said to have been created as a mass of liquid and gases, 5% to 10% of which was steam. As the fluid cooled, by losing heat at the surface, an outer solid crust formed and the steam condensed to form oceans and lakes in depressions of that crust. The crust now averages about 32 km in thickness. Below that crust, the molten mass called magma is still in the process of cooling.

Geothermal steam is of two kinds,

1. **Magnetic Steam :** Originating from the magma itself.
2. **Meteoritic Steam :** Obtained from ground water heated by the magma. It is the largest source of geothermal steam.

Factors that Decide the Usage of Geothermal Energy in Power Generation

1. More flexible to use
2. Low cost
3. High energy content
4. High capacity factor (it is the ratio of actual energy generated to the product of capacity and time).
5. High energy density
6. Highly responsive and easily controllable.

Q26. What are the advantages and disadvantages of geothermal energy over other energy forms?

Answer :

Advantages of Geothermal Energy

For answer refer Unit-IV, Q10.

Disadvantages of Geothermal Energy

1. It has less overall efficiency in power production, that is about 15%, whereas the fossil fuel plants possess an efficiency of 35% to 40%.
2. It may cause surface instability, due to the continous extraction of energy.
3. Harmful gases are released during extraction of energy, which causes air pollution.
4. The extraction of energy creates noise pollution clue to drilling operation.
5. The availability of geothermal resources are very less i.e., only in certain places. Therefore, power plants are installed only in few places.

Q27. How is geothermal energy generated inside the earth crust? In India where is geothermal energy available?

Answer :

The geothermal field consists of magma, rocks, reservoir, geysers, springs, fissures, wells etc., as shown in figure.

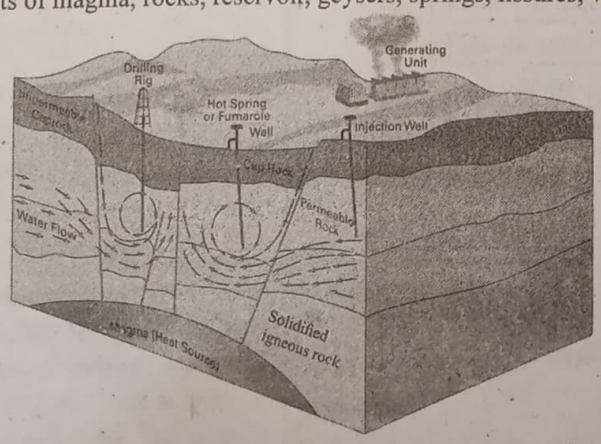

Figure: Geothermal Field

WARNING: Xerox/Photocopying of this book is a CRIMINAL act. Anyone found guilty is LIABLE to face LEGAL proceedings.

The lower most portion of the field is "magma" i.e., hot molten rock. Above magma there are igneous rocks which were formed due to the solidification of magma. The water from the surface reaches to the underground through fissures and gets heated due to the high temperature of igneous rocks and converts into hot steam which mores upwards into a permeable reservioir. This hot water is protected by the hard layer of rock. There are vents inside the rocks which on moving to the surface of earth are termed as geysers and hot springs. The heated water is utilized for geothermal power plant by digging the wells into the underground geothermal field.

Geothermal Provinces of India

In India, there are 400 geothermal springs of medium and high enthalpy. Most of them are liquid dominated systems. Among them one or two consists of both liquid and gas dominated systems. All these systems are located in seven provinces in the country.

Geothermal Provinces

1. **The Himalayan Province :** It is one of the best provinces in India.
   Number of springs : 100 (approximately)
   Surface temperature : 90°C
   Discharge : greater than 190 tons/hour
2. **Cambay Province :** It is located in Gujarat and extended to some parts of Rajasthan. It is a part of Cambay basin.
   Number of discharge sites : greater than 15
   Surface temperature : 40°C - 90°C
   Reservoir temperature : more than 150°C
   Steam Discharge : 3000 m^3/day
3. **West Coast Province :** It is located in Maharashtra.
   Number of hot water springs : 60
   Surface temperature : 40°C - 72°C
   Sub surface temperature : 110°C - 150°C
4. **Sonata Province :** It is the acronym of Son - Narmada - Tapti. This province extends from Camby (west) to Bakreswar (east). The famous sites of this province are Tattapani, Salbardi, Surajkund.
   Surface temperature - 30°C - 93°C (thermal springs)
   Surface temperature - 24°C - 25°C (cold spring)
   Reservoir temperature - 132°C - 265°C
5. **Sohana Province :** It is located in Gurgaon district of Haryana.
   Surface temperature - 24°C - 46°C
   Reservoir temperature - 100°C
6. **Godavari Province :** It is located in Andhra Pradesh
   Number of thermal discharges : 13
   Surface temperature - 50°C - 60°C
   Reservoir temperature - 175°C - 215°C
7. **The Mahanadi Province :**
   Number of geothermal springs : 8
   Surface temperature - 96°C
   Reservoir temperature - 180°C

Q28. Explain the nature of geothermal fields.

Answer :

Geothermal field may be classified based on the following parameters.

1. **Temperature Gradient**
   (i) **Non-thermal Areas**
   The areas where temperature gradient is 10°C to 40°C/km depth.
   (ii) **Semi Thermal Areas**
   The areas where temperature gradient is 70°C per km depth.
   (iii) **Hyper-thermal Areas**
   The areas where temperature gradient is very high compared to non-thermal areas.

2. **Pressure and Temperature**

(i) **Hyper-thermal Field**

(a) **Wet Field**

They produce large amount of pressurized water at a temperature above 100°C and small amounts is splashed into steam at the surface.

(b) **Dry Fields**

They produce dry saturated steam or superheated steam at the surface. The pressure of the steam is above atmospheric pressure.

(ii) **Semi-thermal Field**

The temperature of hot water in these fields is above 100°C.

Q29. Discuss in detail about various methods to harness geothermal energy. July-19, (R15), Q9(a)

OR

Explain various methods of harnessing the energy. May-16, (R09), Q6(b)

OR

Classify various geothermal resources. May-13, (R09), Q6(a)

OR

Describe various energy extraction technologies used with hydrothermal resources.

Answer : [June-18, (R13), Q8(b) | Model Paper, Q8(a)]

Geothermal resources are classified into four types. As per the resources, there is the method of extracting the energy.

Geothermal sources can be classified as,

1. Hydrothermal systems
   (i) Vapour-dominated system
   (ii) Liquid-dominated system
   (iii) Hot-water fields.
2. Geo-pressurised systems
3. Petro-thermal systems
4. Magma resources.

1. **Hydrothermal Systems**

Due to the magma magma's heat, water on the surface of the magma gets heated. These can be vapour-dominated and liquid-dominated systems.

(i) **Vapour-dominated System**

In this type of system steam is generated as the water gets heated due to the heat of magma. This steam is used to produce power by Rankine cycle.

(ii) **Liquid-dominated System**

The water temperature in the reservoirs is about 100°C, but water does not boil as it is under pressure. As the water comes to the surface, there will be pressure drop and rapid boiling of water takes place which "flashes" into a mixture of hot water and steam. This hot water can be utilized to generate electric power.

(iii) **Hot-water Fields**

It is similar to the liquid-dominated systems.

2. **Geo-pressurised Systems**

Geo-pressurised system is hot water in which substantial amount of methane are dissolved. These are at about 160°C under very high pressure trapped underground at about 2400 to 9100 m depth. Electricity is generated by the combustion of methane as well as heat from the thermal content of water.

3. **Petro-thermal Systems**

When there is no availability of water at normal depths this is used. Though water is not available there will be hot rocks at normal depths. So the cold water is pumped into hot rocks by which water gets heated and should be get back out of the surface, thus electricity is produced. These temperatures of hot dry rocks can be called as petro thermal energy.

4. **Magma Resources**

These consist of partially or completely molten rock with temperature in excess of 650°C, which may be available at moderate depths. These have large geothermal energy content, but are restricted to flow locations.

Q30. What are hydrothermal resources? Explain.

Answer :

Hydrothermal resources

These are the natural and commonly used sources of geothermal energy. The surface water enters into the earth crust and the deeper layers of 2 to 15 km. The water reaches a reservoir which is covered by solid impervious rocks. When the water comes in contact with the hot rocks above the magma, it gets heated by the heat generated from the magma upto a temperature of 350°C and its pressure also increases. The density of hot water is less compared to cold water. Therefore, the hot water rises up and escapes through the fissures and forms as hot springs (geysers) on the surface. In most cases, the layer of the impervious rocks restricts the flow of hot water. In such places, the hydrothermal energy is obtained by drilling wells.

Based on the output obtained, hydrothermal resources are classified into two types.

1. **Vapour Dominated Systems :** In this system, the energy is obtained in the form of steam with no or less water. The temperature ranges from 150°C - 250°C.
2. **Liquid Dominated Systems :** In this system, the energy obtained is a mixture of steam and hot water.

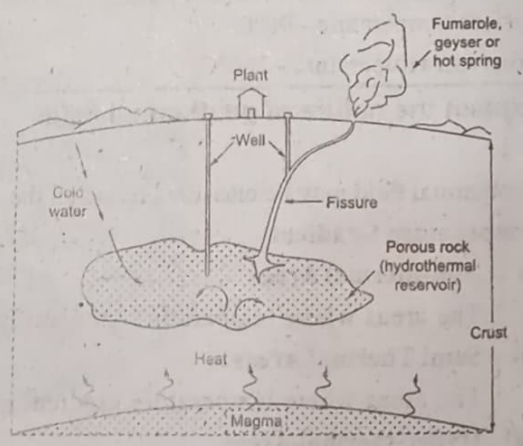

Figure

WARNING: Xerox/Photocopying of this book is a CRIMINAL act. Anyone found guilty is LIABLE to face LEGAL proceedings.

Q31. Describe with a neat sketch the hot spring structure.

Answer :

May-15, (R09), Q6(a)

Hot springs are the springs of water, which is heated geothermally to high temperatures. They are produced through hot molten magma, crystalline rocks, permeable rocks and draining ground water.

The water which is disposed from the industries and due to rainfall, is drained through the ground and fractured rocks present on the earth's crust. This water which is percolated deeply, comes in contact with the permeable rocks, laid over each other. Later, the water passes through the 'impermeable rocks' which are laid below the permeable rocks and then conducts the hot magma. Hot magma which is a molten mass which is present at a depth of 5000 m at the earth's interior, from the earth's crust. This hot magma transfers the heat to the percolated water by conduction. As a result, this hot water, escapes out through the fractured rocks and comes out as springs.

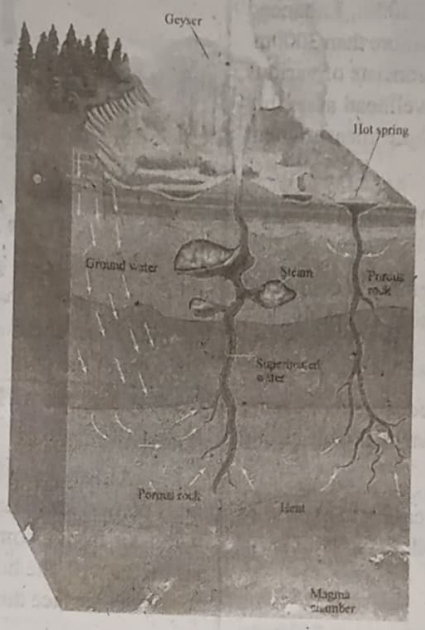

Figure: Hot Spring Structure

4.1.2 Types of wells

Q32. Explain self-discharging wells with neat sketches.

Answer :

Self-discharging wells are the most effective wells and generate high energy. The circulating pump and the boiler are repused by these wells. Most of the production wells, 2-phase and vapour dominated wells are self discharging. These wells have lower reservoir pressure. The wells which self discharge are changed into either monitoring wells or reinjection wells or even abandoned.

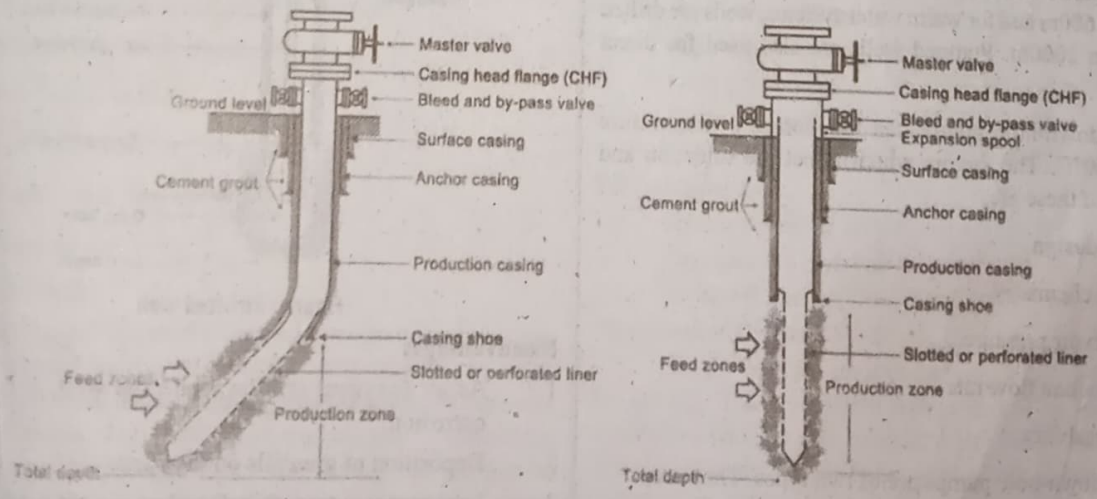

Deviated (J-shaped) with no expansion spool

Vertical well with expansion spool

Figure

These wells are designed based on the casing design. There are different types of casings used in different sizes of wells (large, standard and small). They are,

1. Conductor casing
2. Anchor casing
3. Surface casing
4. Production casing.

Different wells are drilled to various depths i.e., conventional wells are drilled upto 1000 to 2500m, Enhanced Geothermal System (EGS) wells are drilled to more than 3000m. The construction of a self-discharging well consists of various parts as shown in figure. On the top of the wellhead assembly there is a service valve. It runs the down-hole measurement tools.

Casing Head Flange (CHF) : It is the valve which connects the master valve to the casing.

Single Skin Assembly : If the wellhead assembly is connected to production casing, it is termed as single skin assembly.

Double Skin Assembly

If the wellhead assembly is connected to anchor casing through an expansion spool, then it is known as double skiing assembly.

Expansion Spool : It makes the production casing to expand or contract thermally with less movement of wellhead assembly.

Permanent Thrust Frame

When the well expands thermally in vertical direction, this frame supports the wellhead assembly in the axial direction.

Q33. Explain in detail about pumped wells

Answer :

Pumped wells are the geothermal wells which use pumps. The wells which cannot self-discharge are made to function using down-hole pumps. Organic Rankine Cycle power plants use these types of wells. For hot water systems wells are drilled to more than 600m and for warm water systems, wells are drilled to more than 2000m. Pumped wells are also used for direct applications.

The down-hole pumps can function at a temperature less than 240°C. The factors which affect the selection and installation of these are,

1. Well design
2. Fluid chemistry
3. Reservoir pressure
4. Production flow rate
5. Permeability.

The down-hole pumps are of two types. They are,

1. Submersible pumps or down-hole motor
2. Line shaft pumps or top drive pumps

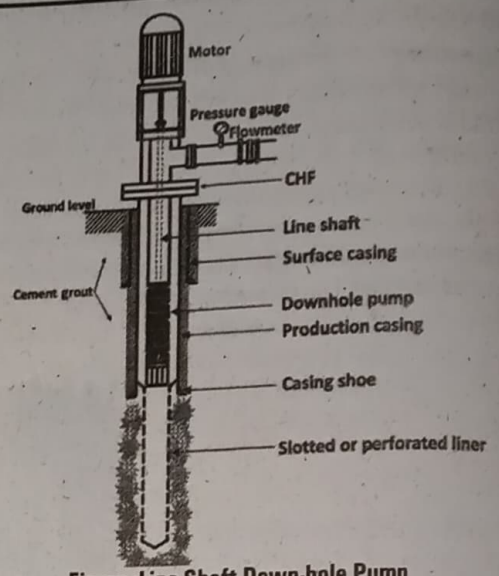

Figure :Line Shaft Down-hole Pump

The pump is generally placed within the cased part of the well to ensure that the pump does not collapse. Generally, the initial cost and maintenance of pumped wells are more. The life span of the pumps is also comparatively less.

Q34. What are airlifted wells? List its disadvantages.

Answer :

Airlifted wells are mostly used for small and medium rates domestic uses such as bathing, space heating, etc. In these wells, air from a compressor is blown into a shallow well. The air mixes with the hot water below the water level and reaches the earth's surface due to the gradual decrease of the mixed fluid

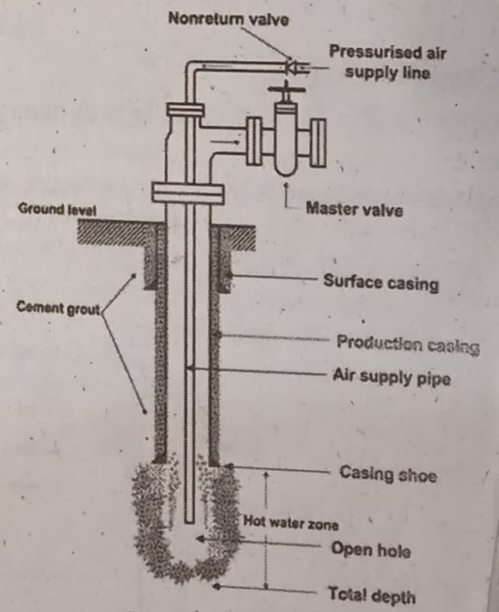

Figure : Airlifted well

Disadvantages

1. As air (oxygen) is blown into the well, it can cause corrosion.
2. Deposition of minerals on the parts.
3. Less power output, therefore they are not used in power generation.
4. Not suitable for large flow rates.

WARNING: Xerox/Photocopying of this book is a CRIMINAL act. Anyone found guilty is LIABLE to face LEGAL proceedings

Q35. Write a brief note on reinjection wells and monitoring wells.

Answer :

Reinjection Wells

Geothermal fluids are sent back into the reservoir after extracting the energy from them. This process is called reinjection and it has many advantages. It also protects the environment from further pollution. The wells used for such purposes are known as reinjection wells. Their design and drilling is similar to the production wells.

In order to avoid the risk of vertical reverse (vertical) flowing of the fluid, the process of reinjection should be done under gravity and with no pressure during the process.

Monitoring Wells

As the name represents these wells are used to measure and monitor the variation of various parameters such as temperature, pressure, water level, fluid chemistry, etc. They give a warning symbol if there is any reverse flow of hot fluid during the injection process. They are shallow wells of less than 100 m depth because depth of the well increases its cost.

The unused production and reinjection wells are converted into deep monitoring wells to observe the changes in the deep reservoirs. In some places, dedicated deep monitoring wells are drilled upto a depth of 400 m to 1500 m with similar casing of production wells. But, in order to decrease the cost, these deeper wells are made of small diameter.

The bubbler tube or the capillary tube is mostly used in deeper reservoirs because due to the high temperatures and harsh fluid chemistry, electronic devices cannot be used in such deeper sections. These are used to monitor the pressure at the reservoir and ensure that the pump is not dried up.

Q36. List various other types of wells and explain any two of them.

Answer :

Certain wells are drilled for a few purposes by industries and departments such as mining. They are,

1. Mining exploration wells
2. Petroleum wells
3. Coal bed methane wells
4. Waste water disposal wells
5. Groundwater wells.

Petroleum Wells

These wells are used to extract petroleum from the deep reservoirs. Based on the production targets, they can be either vertical or horizontal. These wells have relatively smaller diameters of 5.5 to 7 inches. They have limited output and less operating temperatures. Therefore, they are not used for production of geothermal energy. A permanent tubing or down hole pump is installed down the well. Some wells are also installed with petroleum down hole pumps and a shaft to drive them.

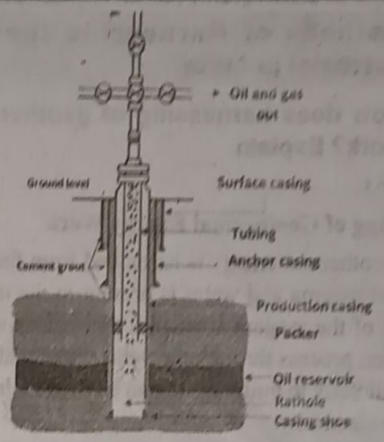

Figure

Ground-Water Wells

These are used for the extraction of water for domestic and industrial purposes. A well dug by the village people is also an example of ground-water well. It has concrete or stone lining and has a large diameter. Also, it is of less cost. To drill deeper wells, rotary drilling is employed. It depends on drilling conditions and depth of the well. Nonmetallic casings are widely used for such wells.

When excess water is available in the winter season, these wells are used for storing them so that they can be used in drought conditions. Slug test is conducted by sending the air of high pressure to airlift the water from the bore well. It is done before the pump installation.

Q37. What are CBM wells and waste-water disposal wells?

Answer :

Coal Bed Methane Wells (CBM)

These wells are used to extract the methane gas which occurs in coal naturally. In the middle stage of coal formation, coal acts as a source of gas and reservoir. CBM reservoirs are better and environment friendly resources when compared to coal and oil. Their reservoirs are available within the coal range of sub-bituminous to low volatile bituminous. They are described based on the following factors.

1. High permeability
2. High reservoir pressure
3. High gas content
4. Large thickness of coal bed.

The down hole pumps are used in CBM wells for the following purposes.

1. Remove water from the coal
2. Decrease the reservoir pressure
3. To desorb the gas from the coal.

Waste-water Disposal Wells

These wells are used to dispose of the waste fluid into the ground. These wells are mostly drilled by the industries. Sometimes water is also reinjected into the ground and it was first started in the year 1865 by a petroleum industry. The field operators are instructed to provide best designs for such wells to protect the environment as the waste waters consist of harmful chemicals such as boron, chloride and selenium.

4.1.3 Methods of Harnessing the Energy - Potential in India

Q38. How does harnessing of geothermal energy work? Explain.

Answer :

Harnessing of Geothermal Energy Work

Geothermal energy is harnessed from the earth's crust, where hot magma and water is present in the deeper regions. The heat of the magma is reaches the surface of the earth by convection process through the vents. This heat produced can be used directly in buildings or can be used to drive turbines to generate electricity.

Heat from the magma and water is brought onto the earth's surface in following two ways,

1. **From Natural Geysers**

   The heat from the magma converts the water in the underground reservoir into steam. This steam and hot water gets trapped in the space between the rocks present above the hot magma and escapes through the earth's surface in the form of fountains called geysers. The steam which is produced through these natural geysers is delivered to the turbines to produce electricity.

2. **By Drilling Pipes**

   It is the alternative method in which the pipes are inserted into the deeper regions of the earth. The steam which is trapped inside rocks is pumped out through these pipes with high pressure. This steam is used for driving turbines and generate electricity.

Q39. Discuss vapour dominated geothermal plant with a diagram.

[April-18, (ME), (R13), Q8(b) | Model Paper, Q8(b)]

OR

Differences between open-loop and closed-loop control systems.

Answer : Nov./Dec.-17, (ME), (R13), Q8(b)

Vapour Dominated System

These systems extracts dry steam of 200°C and pressure limited to 8 bar, i.e., similar to the steam used in turboelectric power plants. Hence, they are also known as dry steam fields. The cost of power generation is less, but adverse effects caused by corrosive gases and erosive material. There are only few vapour dominated systems in the world.

Working of Vapour Dominated Power Plant

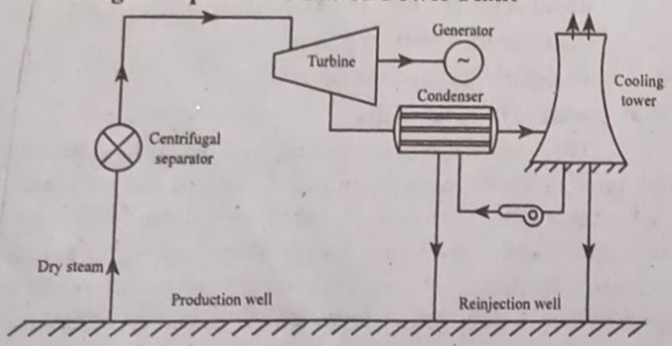

Figure: Working of Vapour Dominated Power Plant

It consists of a centrifugal separator, turbine, condenser, generator and a cooling tower.

During its working, dry steam is extracted from the reservoir and passed into the centrifugal separator through the production well. In centrifugal separator, the solid particles and impurities present in steam are removed. Then, this steam enters the turbine, where it expands over the turbine blades, to run the generator coupled to it. The exhaust steam from the turbine is supplied to the condenser, where the wet steam get condensed, by means of cooling water. The excess water is again supplied into the reservoir through a reinjection well. The warm water leaving the condenser is supplied to the cooling tower, where it is cooled and directed back to the condenser.

Q40. Explain the principle and operation of a liquid dominated system with a neat sketch.

Answer :

Liquid-dominated Systems

In a liquid-dominated system, the temperature of the underground water is slightly higher than its boiling point temperature. But the liquid does not boil because of the under pressure in the reservoir. As the water reaches to the surface, there will be pressure drop and rapid boiling of water takes place which flushes into a mixture of hot water and steam. The mixture is made to pass through the cyclone separator where the water and steam is separated. The steam is made to pass through turbine which is attached to a generator for generating electricity. The water is made to pass through condenser and then again into the geothermal wells.

The liquid-dominated system is classified into following types. They are,

(a) The flash steam system

(b) The binary system

(c) The total flow system.

Flash System

The flash system consists of a flash chamber, turbine, generator, condenser, pump, etc., as shown in figure. There are three types of flash systems. They are,

(i) Single-flash system

(ii) Double-flash system

(iii) Multiple-flash system.

In these systems, the hot brine solution i.e., mixture of salt water and steam is made to pass over the flash chamber using throttling process. In flash chamber the low quality mixture of steam and water is separated and the high quality mixture is passed into the steam turbine. The steam turbine is connected with the generator, which results in the production of electricity. The remaining steam is made to pass through condensers and then into the geothermal wells through pump.

WARNING: Xerox/Photocopying of this book is a CRIMINAL act. Anyone found guilty is LIABLE to face LEGAL proceedings.

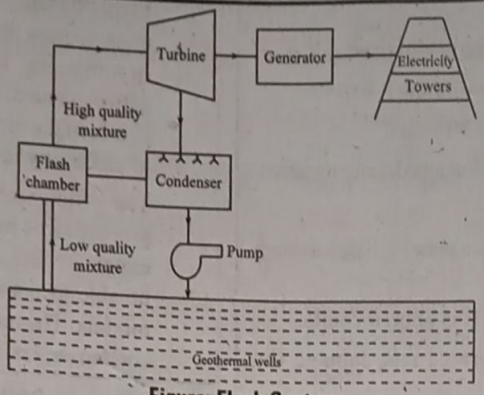

Figure: Flash System

Similarly, the process is carried on double and multiple flash steam where high efficient quality of steam is pumped into the turbine.

Q41. Explain the process of energy conversion from dry rock geothermal resources. May-19, (R Q9(a)

OR

With the help of line diagram, explain the heat extraction from hot dry rocks. April-18, (EEE), (R13), Q8(b)

OR

With line diagram, explain the heat extraction from hot dry rocks.

Answer :

May-17, (ME), (R13), Q8(a)

Hot dry rock (HDR) is also called as petrothermal system. In this system heat is extracted from the impermeable (water resistant) rocks that are situated beneath the earths surface. There is no water in these layers. The rocks which are present at a depth of 5 km from the surface posses a temperature greater than 200°C and are considered us the best source of developr t.

In hot dry system, for extracting the heat, the rocks are fractured and cold water is sent through the wells towards the r s. The water extracts heat from the rocks and converts into steam. This steam is extracted through another well, which is made to reach the earth's surface and utilised to generate electricity.

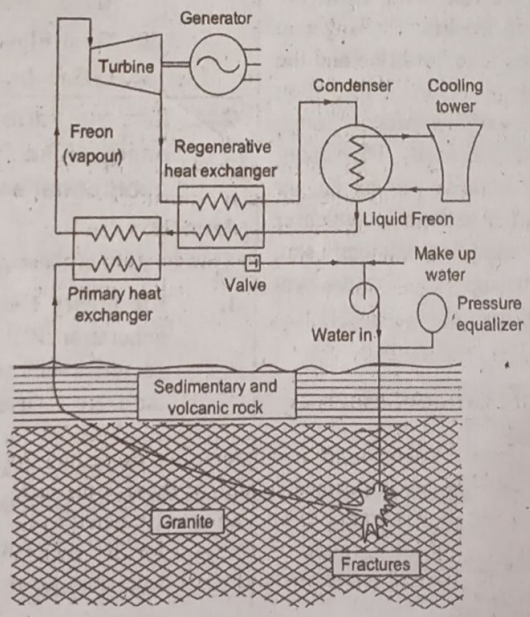

Figure: Hot Dry Rock System

In order to extract the heat from the hot dry rocks, the rocks are fractured which also increases their heat transfer. The various methods to fracture the dry rocks and obtain the geothermal energy are,

1. Detonating a nuclear explosive at the bottom of a drilled well
2. Hydraulic fracturing : Making a large crack in the rocks by pumping water at high pressure. The thickness of the crack might be less than a centimeter but its diameter is hundreds of meters.

Advantages

(i) The process is flexible and can be easily used.

(ii) Steam can be produced in larger amount.

(iii) The life of system is 10 years to 30 years.

(iv) By varying the water supply, the steam required can be regulated.

Disadvantages

(i) Initial cost for setting the system is very high due to deep drilling of wells.

(ii) The leakage of water in the wells is unpredictable.

(iii) The gases from the earths surface can damage the components of the system.

Q42. Explain the following types of liquid-dominated systems, (i) Binary cycle system (ii) Total flow system.

OR

Draw the line diagram and explain the working of Binary fluid geothermal power system.

Answer : April-18, (EEE), (R13), Q8(a)

(i) **Binary Cycle System**

A binary cycle system is used widely instead of flash system because of its corrosion resistant property of the working fluids such as Isobutane, Freon-12, etc. These fluids are environmental friendly and causes no pollution. This system works on the principle of closed Rankine cycle. The binary cycle system uses two fluids - one is geothermal fluid and the other is working fluid. Basically, the system consists of a primary heat exchanger, turbine, generator, condenser, cooling tower, etc., as shown figure.

In binary system initially the hot brine from the geothermal well is passed into the heat exchanger in which the heat transfer between the hot brine and the working fluid takes place. This results in the formation of super heated vapour. The vapour then passes through turbine-generator and generates electricity. The vapour from the turbine is sent to regenerative heat exchanger where it cools down. It is further sent to a condenser and cooling tower. The condensed liquid is again sent to primary heat exchanger through regenerative heat exchanger and the process repeats.

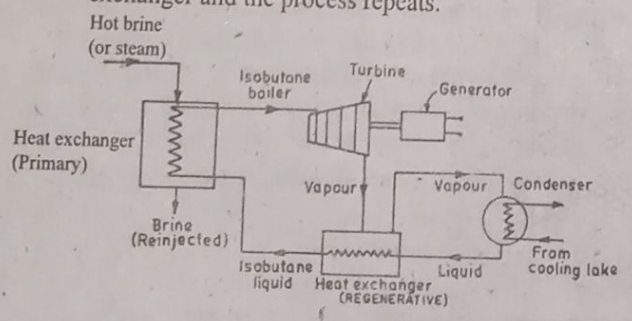

Figure: Binary Cycle System

(ii) **Total Flow System**

The total flow system is based on the principle of "Lysholm Machine" also known as mixed phase expander. The system consists of a turbine (mixed phase expander), condenser, cooling tower, generator, pump etc.

In this system, the hot brine from the geothermal well is made to pass through the turbine using throttling valve. In turbine the low quality mixture of steam and liquid gets expanded. Since, it is a mixed phase expander the blades of the turbine gets rotated and results in formation of electricity in generator.

The efficiency of turbine-generator depends on the properties of mixed phase expander. The mixed phase expander should be corrosion resistant and should be able to resist the water droplets of the low quality mixture. The remaining mixture is made to pass through condenser, cooling tower into the well using pump.

Q43. What is geothermal energy and explain the types geo thermal power plants?

Answer : July-21 (EEE), (R16), Q8(a)

Geothermal Energy

For answer refer Unit-IV, Q25, Topic : Geothermal Energy.

Types of Geothermal Power Plants

The geothermal power plants are classified as follows.

1. **Vapour Dominated Geothermal Plants**

For answer refer Unit-IV, Q39, Topic : Vapour Dominated System (Exclude Working).

2. **Liquid Dominated Geothermal Plants**

For answer refer Unit-IV, Q40, Topic : Liquid Dominated System.

(i) **Flash System :** For answer refer Unit-IV, Q40, Topic : Flash System (Exclude Working).

(ii) **Binary System :** For answer refer Unit-IV, Q42, Topic : Binary Cycle System.

(iii) **Total Flow System :** For answer refer Unit-IV, Q42, Topic : Total Flow System.

Q44. List the various applications of Geothermal energy. Also specify benefits and limitations of geothermal energy storage.

Answer : May-17, (EEE) (R13), Q8(b)

Applications of Geothermal energy

1. **Electricity Generation :** It can be used for power generation if the temperatures are above 150°C. In countries such as the United States, Italy, New Zealand the energy is used for generating electricity. The energy can be used for generation of base load power. Peak load power generation is not possible due to the effect of scaling and corrosion.

2. **Industrial Process Applications**

(a) Drying of crops

(b) Chemical and textile industries

(c) Food dehydration

(d) Drying of cement slabs in cement industry

(e) Paper manufacturing

(f) Coal drying and gasification

(g) Pasteurizing milk

WARNING: Xerox/Photocopying of this book is a CRIMINAL act. Anyone found guilty is LIABLE to face LEGAL proceedings.

Agriculture and Aquaculture : Geothermal energy is used in greenhouses and in cold places to enhance the growth of crops and also fish in the ponds.

Direct Heating

(a) **Space Heating :** The heat from the geothermal fluids is used for heating the buildings.

(b) In cold countries, it is also used for cooking, bathing and keeping their houses warm.

Benefits of Geothermal Energy Storage

1. Wastewater is recycled
2. There is no effect on the minerals in the soil and they are preserved.
3. Less utility costs
4. Less emission of carbon dioxide.

Disadvantages of Geothermal Energy Storage

1. Greatly affected by the surrounding environment
2. The underground heat impacts the storage system
3. It is economical only when injected heat is completely recovered.

Q45. What are the possible sources of geothermal pollution? How to avoid them?

Answer : May-17, (ME), (R13), Q8(b)

Following are the various sources of geothermal pollution and the methods to avoid/reduce them.

1. **Solid Particles and Non-Condensable Gases**

Steam and water contains dissolved solids, solid particles and non-condensable gases. These solid particles are removed from the water with the help of centrifugal separators at the head of the wall and by the strainers. The condensable gases like CO_2, CH_4, H_2, N_2, NH_3 and H_2S in the atmosphere as well as in the water can be removed by the particle centrifugal separators, condenser ejectors and cooling towers.

2. **Water Pollution**

The discharge of heat and toxic substances into rivers causes water pollution, due to which the fisheries and the farming activities are affected. The process of re-injection of geothermal fluid into the reservoir minimizes the surface pollution.

3. **Land Erosion**

This can be controlled by planting shrubs and trees on large scale.

4. **Noise Pollution**

It caused by exhausts, blowdowns, centrifugal separation, etc. It can be minimized by installing silencers on such equipment. The noise caused by the flashing steam can also be eliminated by re-injection.

5. **Water Borne Poisons**

The water borne poisons like toxic mercury, arsenic, ammonia, etc., in wet fields contaminating the downstream and the highly saline bore water can be prevented from mixing and polluting by re-injection and by disposal of these contaminants into sea through ducts, channels and evaporator ponds.

6. **Air-Borne Poisons**

The escape of harmful substances containing radioactive materials into air at thermal sites can be avoided by providing a horizontal well discharge in a controlled direction and by systematic monitoring of these sites.

7. **Heat Pollution**

Heat pollution affecting the fisheries and promoting the growth of unwanted water weeds in river water can be controlled by re-injection of surplus cooling tower water and unwanted bore water. It can also be avoided by generating additional power by binary fluid cycles.

8. **Silica**

If water containing silica is re-injected, then there is a possibility of substrate permeability to flow causing change of bore re-injection locations. This can be avoided by proper pond settlement.

9. **Subsidence**

The subsidence of ground is also a major problem caused by extracting the geothermal fluids in large quantities from the field. This can be avoided by re-injection, which compensates the quantity of fluid extracted to a considerable extent.

10. **Seismicity**

The long-term exploitation of geothermal energy leads to seismicity and earthquakes. These are caused mostly in areas having high shear stress.

11. **Escaping Steam**

Large amount of flash steam discharged into the air results in dense fog and if drifted on roads causes traffic hazards. This can be avoided by discharging a small amount of steam.

12. **Geo-pressurised Water**

Water flowing with large amount of sand at high flows, causes erosion and scaling problems.

Q46. Enumerate the environmental issues associated with utilization of following renewable energy sources.

(a) Geothermal energy and

(b) Open cycle OTEC system.

Answer : May-17, (EEE), (R13), Q9

(a) **Geothermal Energy**

For answer refer Unit-IV, Q13.

(b) **Open Cycle OTEC System**

An open OTEC system have the following impacts on the environment,

1. In this system, when the warm water containing CO_2 particles is discharged into the atmosphere, it effects the surrounding environment.
2. Due to the circulation of water during operation, living organisms in the ocean are effected and can be killed.
3. Ecosystem surrounding the power plant will have adverse effects as the temperature and salinity of water changes.
4. It also effects the ocean currents and weather.
5. Environment also experiences biological effects due to the discharge of more amount of cold water into the surfaces with warm temperatures.

Q47. Explain about the potential of geothermal energy in India.

Answer : July-19, (R15), Q9(b)

Potential of Geothermal Resources in India

In India, about 340 thermal areas, in the form of hot springs have been discovered. And, there are 93 systems, which are considered as the total stored heat potential. The total heat potential of these systems is 36.87×10^{18} calories. This is nearly equal to the energy released by burning 5160 million tonnes of coal or 25440 million containers of oil. Among these 93 systems, 38 are used in electrical power generation, as they posses high temperatures. For 100 years, the power generated by these systems is estimated to be about 500 MW and for 30 years, it is 1650 MW. The other remaining systems are used in applications, other than power generation, due to their intermediate and low temperatures. They has total stored heat potential of about 19.37×10^{18} calories, but only a part of this potential, i.e., 1.135×10^{8} calories are utilized for practical use. The heat potential of about 2.185×10^{16} calories can be practically utilized, if all the 93 systems are used in applications, other than power generation. For supplying this amount of heat, by means of electricity, nearly 10000 MW of electric power may be required for about 30 years. This value is 10% of the total expected power generation in India by the end of a century.

The geological survey of India have discovered nearly 50 geothermal fields of steam in Puga valley of Ladakh, which are capable of operating a 5 MW power generation plant.

Q48. Discuss the potential of geothermal resource in the world, bringing out the salient points for energy conversion in India.

Answer : May-19, (R15), Q8(a)

Potential of Geothermal Resource in the World

According to the geological survey conducted by United states of America, magnitude of heat corresponding to the temperature above 15°C upto 10 km deep into the earth's crust is said to be geothermal resource. Considering this, geothermal resource in the world may be 2.11×10^{25} J. In order to produce equivalent energy, it is required to burn 10^{9} million tonnes of oil equivalent (MTOE). Corresponding to the current rate of energy usage it will be sufficient for 350000 years.

Pacific plate is the region at which maximum number of world's geothermal fields are located. Pacific plate is also known as ring of fire, since belt of these fields forms a ring around the pacific ocean. Geographical location of these fields includes Argentina, Ecuador, Chile, Peru, Central America, Western North America, Kamchatka, Philippines, Japan, Indonesia and New Zealand. Few geothermal sites are also present in Mediterranean ara. Interior continental rifts located in Kenya, Ethiopia and East Africa, and mid ocean ridges present in Azores and Iceland consists of hot crustal material. Deep sedimentary basins in Western Canada, Western Siberia, Gulf coast of United states, Southern Europe and Central Europe consists of low enthaply geothermal resources.

Geothermal resources available across the world can be used directly for space heating, water heating application and also for power generation. Few countries and their installation capacities are shown in the table below.

Country	Installed Capacity (MW)	
	Direct Application	Power generation
Mexico	156	953
USA	8670	2564
China	3687	25
Japan	822	535
Turkey	1229	20
France	308	15
Iceland	1804	232
Italy	682	810
Russian Federation	308	79
New Zeland	350	435

Salient Points of Energy Conversion in India

For answer refer Unit-IV, Q8.

Q49. Briefly describe different analytical methods to estimate geothermal potential.

Answer : April-18, (ME), (R13), Q8(a)

Estimation of Geothermal Potential

The three methods that are used for the estimation of geothermal potential are as follows.

1. Stored heat method or volumetric method
2. Lumped parameter model
3. Detailed distributed parameter modelling.

WARNING: Xerox/Photocopying of this book is a CRIMINAL act. Anyone found guilty is LIABLE to face LEGAL proceedings.

Two of them are discussed below,

1. **Stored Heat or Volumetric Method**

This method is used at the initial stage of estimation. In this method, the geothermal potential is estimated by knowing the static reserve of heat in the resource and energy that can be recovered is obtained by applying a recovery factor to it. Estimation of total heat in a reservoir volume is given by the equation,

$$E_T = V\rho_r C_r (1-\phi)(T-T_{ref}) + V\rho_f C_f \phi_f (T-T_{ref})$$

Where,

V – Volume of the reservoir

$V\rho_r C_r (1-\phi)(T-T_{ref})$ – Storage of heat in rock

$V\rho_f C_f \phi_f (T-T_{ref})$ – Storage of heat in the water present in the pores

∴ Recoverable energy,

$$E_R = R_f E_T$$

Where, R_f – Recovery factor

According to Muffler and Cataldi, the recovery factor for geothermal systems of water dominated type is based on the porosity which lies with in the range of 0% at $\phi = 0$ and 25% higher at $\phi = 20$.

$$R_f = 1.25\,\phi$$

Amount of heat that can be converted to useful energy will depend on the conversion losses and fraction of energy. Then the equation for economic geothermal resource is given by,

$$E_e = f \times E_R$$

Where, f – Factor of efficiency

Considering above discussed factors and the load factor which gives the operation time of the plant, the equation for geothermal energy conversion to power is

$$P_t = \frac{\text{Available energy} \times \text{recovery factor} \times \text{efficiency factor}}{\text{Load factor} \times \text{life time}}$$

$$\therefore \quad P_t = \frac{E_T \times R_f \times f}{\text{L.F} \times \text{Life time}}$$

2. **Lumped Parameter Modelling**

As the stored heat or volumetric method provides static geothermal reserve, it is not appropriate for developing an optimal production strategy of using geothermal energy, it is necessary to generate a model of the system using the parameters defining geothermal reservoir. Thus lumped parameter modelling was introduced which is highly suitable in cases where the availability of time for calculation and data related to reservoir nature are limited.

The principle of this method involves the usage of tanks or boxes with capacitances instead of reservoir. Generally, most of the models use two to three tanks but it may vary depending upon the reservoir complexity. It can be represented as shown in figure below,

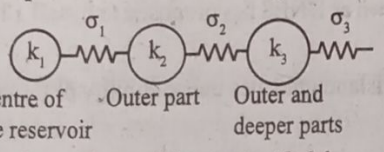

Figure: Lumped Parameter Model

This method is used for calculating pressure response data related to the energy produced from the reservoir. For a lumped parameter model, the pressure response is given by,

$$p(t) = -\sum_{i=1}^{N} Q \frac{A_i}{L_i}(1-e^{-L_i t}) \quad \text{... (1)}$$

Where,

N – Number of tanks

Q – Heat for energy

t – Time

Equation (1) represents pressure response of open model with number of tanks. In this, the pressure is constant.

$$p(t) = -\sum_{i=1}^{N-1} Q \frac{A_L}{L_i}(1-e^{-L_i t}) + QBt \quad \text{... (2)}$$

Equation (2) represents a pressure response of closed model with one equivalent tank. The pressure in this system changes as the production starts.

Where, A_i, L_i and B are coefficients which are the functions of coefficient of storage of the tank k_1 and the coefficient of the conductance of the resistors σ_1.

Storage coefficient of a tank is given by,

$$k_i = V_i s$$

Where,

V_i – Tank volume

s – Ability of storage of the tank

$= \rho_t \times (\phi C_W + (1-\phi) C_r)$

4.2 Ocean Energy

4.2.1 OTEC – Principles – Utilization – Setting of OTEC Plants – Thermodynamic Cycles

Q50. Explain the process of energy conversion from oceans. [May-19, (R15), Q8(b) | Model Paper, Q9(a)]

OR

Explain the principle of ocean thermal energy conversion. (OTEC)

Answer : [July-21, (ME), (R16), Q8(a) | May-15, (R09), Q7(b)]

Working of an OTEC System

The concept of Ocean Thermal Energy Conversion (OTEC) was first introduced by a French physicist J.D. Arsonval. It is based on ocean thermal gradient principle of thermodynamics. It states that 'If a heat source is available at higher temperature and a heat sink at lower temperature, then it is possible to utilize the temperature difference to operate a machine or prime mover such as turbine, which can convert a part of heat taken from the source into mechanical energy and hence into electrical energy by using a generator. The remaining heat is discharged to the sink at lower temperature.

The surface of sea water acts as a solar heat collector. The surface of the sea will have higher temperature, and is considered as heat source. The water at deeper levels at the sea are at relatively lower temperatures, and is considered as 'heat sink'. This temperature gradient can be utilized to run a heat engine to generate power. This is known as ocean thermal energy conversion (OTEC).

Let,

T_1 – The temperature of the upper surface layer

T_2 – The temperature of the cold water in deep ocean.

Then the Carnot efficiency of the heat engine is given by,

$$n_{carnot} = \frac{T_1 - T_2}{T_1}$$

The actual efficiency of a practical OTEC plant is less than 2%.

Q51. Describe the open cycle OTEC power plant and give the status of OTEC plants in India.

Answer : June-18, (R13), Q9(a)

Open Cycle or Claude Cycle

The open cycle OTEC system is also known as Claude cycle. It uses sea water as the working fluid. The schematic diagram of a open cycle OTEC is shown in below figure.

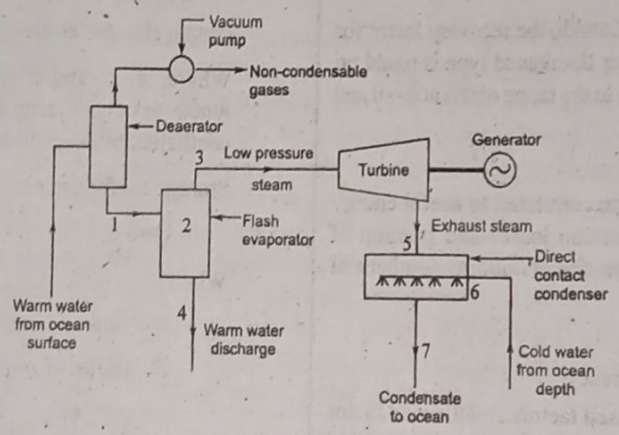

Figure (1)

The warm water from the ocean surface is supplied to the evaporated through a degasifier/deaerator. In the evaporator the warm water is flash evaporated under vacuum (the evaporator pressure is maintained slightly below the saturation pressure corresponding to the warm water). Thus, a low pressure steam is produced. Then the steam expands in a turbine which is coupled to a generator to produce electricity. After expansion, the exhaust steam from the turbine is passed to a direct contact type condenser. In the condenser, the exhaust steam mixes with the cold water brought up from the deep ocean, and the mixture of condensed steam and ocean cold water is discharged into the ocean. The thermodynamic cycle of open cycle OTEC is shown in below figure.

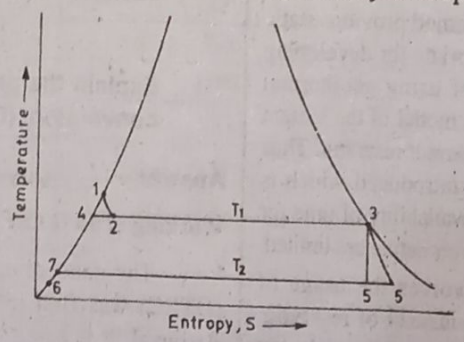

Figure (2)

Status of OTEC Plants in India

(i) In India, the Department of Non-conventional Energy Sources also known as DNES has proposed to install a 1 MW OTEC plant in Lakshadweep Island at Minicoy and Kavaratti.

(ii) Preliminary oceanographic studies on the eastern side of Lakshadweep Island indicates the possibility of the establishment of shore based OTEC plant at the Island.

(iii) The OTEC plant will bring up the water from 1000 m depth which has large nutrient value.

WARNING: Xerox/Photocopying of this book is a CRIMINAL act. Anyone found guilty is LIABLE to face LEGAL proceedings.

Q52. Explain the closed cycle OTEC plant and list out the major problems associated OTEC.

Answer :

Closed Cycle OTEC Plant April-18, (ME), (R13), Q9(a)

The closed cycle OTEC system is also known as the Rankine cycle or Anderson OTEC cycle, in which the low boiling point working fluids such as ammonia, propane, R22, etc, are used as working fluid. The warm surface water from the ocean is pumped through an evaporator. The evaporator acts as a boiler, in which the high pressure working fluid absorbs heat and converted into vapour. This vapour is supplied to a turbine, where it expands and develops mechanical power, which runs a generator to produce electricity. Then the expanded vapour coming out of the turbine is condensed in a condenser with the help of cold water brought up from the ocean depths through a pump and cold water pipe. The condensed liquid is pressurised with the help of a pump before being fed into the evaporator again, thus this cycle is a closed cycle. The schematic diagram and thermodynamic representation of the closed cycle OTEC is shown in below figure.

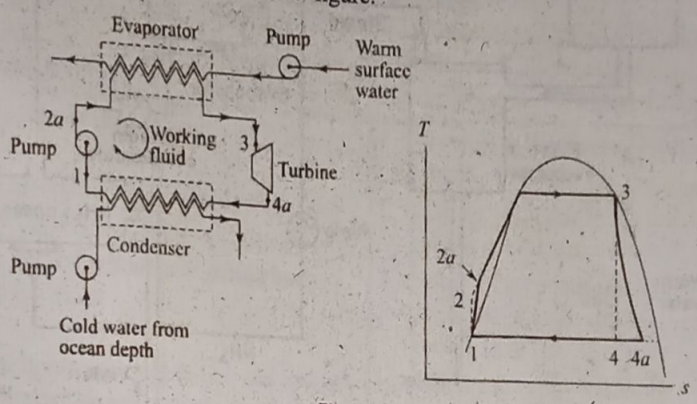

Figure

Problems Associated with OTEC

For answer refer Unit-IV, Q55, Topic: Disadvantages of OTEC Plant.

Q53. Describe the Closed cycle OTEC system with its advantages over Open cycle OTEC system.

Answer :

Closed Cycle OTEC System July-21, (R16), Q8

For answer refer Unit-IV, Q52, Topic : Closed Cycle OTEC Plant.

Advantages Over Open Cycle OTEC System

The improvements in closed cycle generation can be proposed by modifying certain components of open cycle ocean thermal energy conversion system.

These are as follows,

1. By adding an improved evaporator which is known as "controlled flash-steam evaporator".
2. By replacing surface condenser with direct contact condenser.
3. By using a plant for cogeneration of electric power and fresh water.

The above modifications helps in increasing the efficiency of the plant.

Q54. Explain the hybrid cycle operation of OTEC plant with a neat diagram. Dec.-20, (R16), Q8

OR

Draw line diagram and explain the Hybrid cycle and its working. April-18, (EEE), (R13), Q9(a)

OR

Draw the line diagram and explain the working of hybrid OTEC cycle.

Answer : May-17, (ME), (R13), Q9(a)

Hybrid Cycle- Ocean Thermal Energy Conservation (OTEC) Systems

In hybrid cycle, the best features of both closed-cycle system and open-cycle system are combined and the worst features are eliminated.

In this system initially, the warm sea water is flash evaporated to steam, similar to an open cycle OTEC system. Then the heat in the steam produced, is supplied to the ammonia based closed cycle OTEC system. The ammonia gas is then fed to the turbine that is coupled to the generator to produce electricity. The exhaust steam from the turbine goes to a condenser, where it gets condensed with help of cold water brought from the deeper levels of the ocean. The condensate is pumped back to the evaporator to repeat the cycle. The schematic diagram of a hybrid OTEC system is shown in below figure.

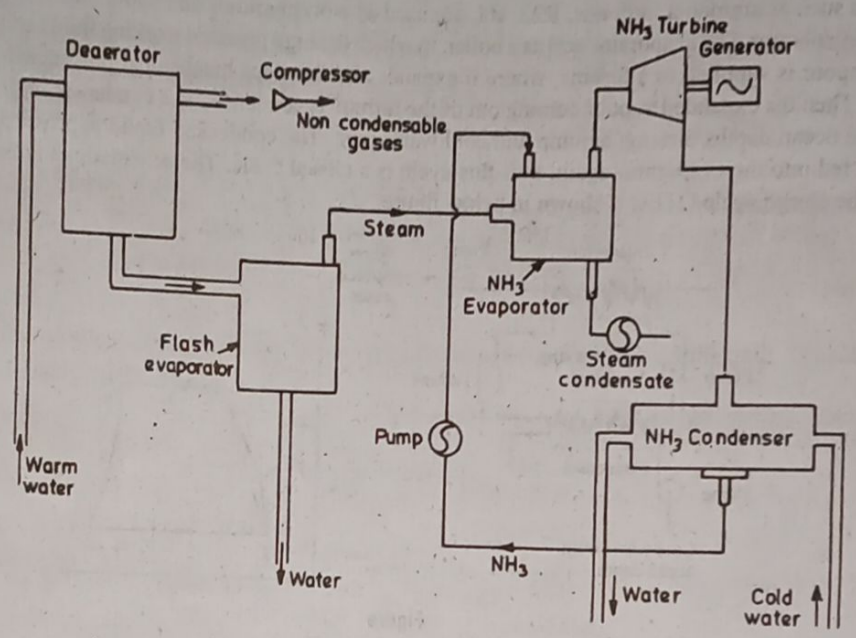

Figure

Q55. What are the advantages, limitations of OTEC plants?

Answer :

Advantages of OTEC Plant

1. OTEC plants produce power which is pollution free.
2. It does not require land area.
3. Fresh water is produced as a by-product in modified open cycle OTEC system, and in closed cycle system, when integrated with desalination plant.
4. It becomes a special alternative source of energy for remote islands.
5. The power can be produced even in mid-sea with the use of floating type OTEC system.
6. It is considered as a steady source of energy, since temperatures in the sea are almost steady.
7. The ocean thermal energy is freely available.

Disadvantages of OTEC Plant

1. Due to the low temperature differences, the plant efficiencies are very low. Thus, to obtained the required power output, plant size should be very large which results in huge capital cost.
2. Incase of open cycle OTEC, many problems are associated with the design, operation and maintenance of the evaporator.
3. For closed cycle OTEC systems, the size of the heat exchangers, both the evaporator and condenser is larger than that of conventional plants.
4. The pumps should handle larger amounts of water, which reduces the net power output.
5. For an OTEC power plant with 100 MW capacity, 1 km long and 30 m diameter pipe is required.
6. The distribution of electric cables from the plant to the shore should be done very carefully, since the cables are subjected to various stresses such as its own weight, ocean currents and eddies.
7. The OTEC plant should be capable of withstanding many ocean storms during its life time, corrosion caused by the salt water, erosion and bio-fouling.
8. In flash evaporators, to maintain vacuum large vacuum pumps are required.
9. The construction of floating power plant is very difficult.

WARNING: Xerox/Photocopying of this book is a CRIMINAL act. Anyone found guilty is LIABLE to face LEGAL proceedings.

Q56. Explain the OTEC scheme and mentions its limitation.

Answer :

May-17, (EEE), (R13), Q8(a)

OTEC Sheme

For answer refer Unit-IV, Q50.

Limitations of OTEC

For answer refer Unit-IV, Q55, Topic: Disadvantages of OTEC Plant.

4.2.2 Tidal and Wave Energy Potential and Conversion Techniques – Economics

Q57. What is the difference between tidal energy and wave energy?

Answer :

July-19, (R15), Q1(g)

	Tidal Energy		Wave Energy
1.	It refers to the hydro energy in ocean tides.	1.	It refers to the waves of water from ocean to the shore.
2.	Tides occur due to the gravitational attractive forces from the sun and the moon.	2.	Waves occur due to the rotation of the earth and the winds over ocean surface.
3.	The water level in ocean rises periodically during high tides and drops during low tides.	3.	Wave have an interval of 4 to 12 seconds. Usually the crest of a waves varies from few centimetres to about 10 m.
4.	The difference in water heads during high tide and low tide is used for rotating hydroturbine generator.	4.	The wave energy rotates the rotor of the wave machine.

Q58. Explain in detail about different types of conversion techniques for tidal energy.

Answer :

July-19, (R15), Q8(a)

Types of Conversion Techniques for Tidal Energy

There are three techniques available for conversion of tidal energy into electrical energy. They are tidal barrages, tidal lagoons and tidal turbines.

1. **Tidal Barrages**

Tidal barrages are similar to that of dams employed in hydroelectric power plants. But, tidal barrages are quite bigger than dams. Constructions of tidal barrages is carried out across an Estuary or a Bay. Minimum value of tidal range i.e., difference between high and low tide should be by 5 m, in order to generate power using the tidal barrage. During high tide period, ocean water enters into the basin through the barrage. The gates of the system gets closed, when the tides become less intense. Thereby ocean water gets trapped in the basin. During low tide period, gates are opened, water flow out of the basin through turbines. This causes turbines to rotate and eventually the power is developed.

Tidal barrage is the most efficient tidal energy conversion technique. But it has negative impact on environment of the locality at which barrage is located and also upfront capital costs involved are high.

2. **Tidal Lagoons**

Working principle of tidal lagoons is same as that of tidal barrages but differ in construction and location. It is smaller in size and located away from the ocean. During high tide period, ocean water is allowed to flow into the lagoons through canal connecting ocean and lagoon. During low tide period, water flows out through an opening in which turbine is located. Thereby, turbine rotates and eventually power generations takes place.

Tidal lagoons does not have any devastating effects on the environment and their upfront capital cost is also low.

3. **Tidal Turbines**

They resemble the windmills, but difference is that they are located underneath the water. Tidal turbine blades are shorter and of higher strength when compared to that of wind mills. Rotation of turbine is caused by ocean water currents. When turbine turns electricity is generated as turbine is coupled to the generator.

Tidal turbines are environmental friendly and their installation cost is high.

Q59. What is the source of tidal energy. What is the minimum tidal range required for the working of a tidal plant? How much is the potential in tides?

April-18, (ME), (R13), Q9(b)

Answer :

Sources of Tidal Energy

Tides are periodic rise and fall of ocean water level, which occur generally twice in each lunar day. The gravitational pull of moon and to a lesser extent the sun, on the earth gives rise to a bulge in the oceans on side facing of moon. On the opposite side of the earth a second bulge creates centrifugal force due to its rotation. The two bulges are high tides and the areas between the bulges are low tides. Tidal energy harnesses the K.E of the ebb and flow of the tides. Tidal flow turbines are similar to wind turbines mounted on the sea bed. Tidal barrages or dams are constructed across the passage of incoming tide.

Tides are driven by the moon's rotation around the earth and waves are driven by the wind blowing across the surface of the water. The main difference is probably the period i.e., tides have a period of several hours, since there are one or two tidal peaks in a day, because it takes a while for the moon to get around the earth, while waves have a short period of few seconds.

Minimum Tidal Range

Minimum tidal range is defined as the difference between the level of mean high tide and low tide.

For a tidal plant operating with conventional equipment, the value of minimum tidal range is 5 m. Whereas, for a tidal plant with low-head equipment is about 2 m.

Tidal Power Potential

For answer refer Unit-IV, Q64.

Q60. Explain different components of Tidal power plants in detail.

April-18, (EEE), (R13), Q9(b)

OR

What is tidal energy? What are the elements of tidal energy power generation system?

Answer :

The periodic rise and fall of the sea level relative to the land is called as tide. Attraction of sea by the moon results in tides. Tidal power is a renewable source of energy and is a form of hydro energy. The energy obtained from tides can be converted to mechanical energy using hydro turbines which in turn converted to electrical energy by generators. The energy generation from tides depends upon the heights of the tides. The height of the tide must be either above or below the level of tidal basin in order to operate the turbine. When height of the tide and the level of the tidal basin are equal, it is not possible to operate the turbine.

The power or energy generation system of tidal energy includes the following elements.

1. **Tidal Basin:** A shallow coastal inlet or bay that is used to store and discard the water as the tide rises and falls respectively is known as tidal basin.
2. **Dam (or) Barrage:** It is a wall constructed across the tidal path i.e., in between sea and tidal basin to trap the water from either going into basin during high tides or going out of basin during low tides. The turbine unit is installed within the barrage tunnels or it may be connected to the barrage.
3. **Power House:** It consists of turbines, generators and other auxiliaries.
4. **Turbine:** It gets operated when water flow occurs from sea to basin and vice versa, which convert the energy possessed by water into mechanical energy. Usually following types of turbines are used in tidal power plants,
   (i) Bulb turbines
   (ii) Rim turbines
   (iii) Tabular turbines.
5. **Sluice Openings (gates):** The flow of water to the basin is controlled by operating sluice gates to avoid overflow or under flow.
6. **Generator:** It is connected to output shaft of turbine so as to convert the mechanical energy from turbine to electrical energy.

WARNING: Xerox/Photocopying of this book is a CRIMINAL act. Anyone found guilty is LIABLE to face LEGAL proceedings.

Power generation during high tides and low tides including various parts is illustrated in figures below.

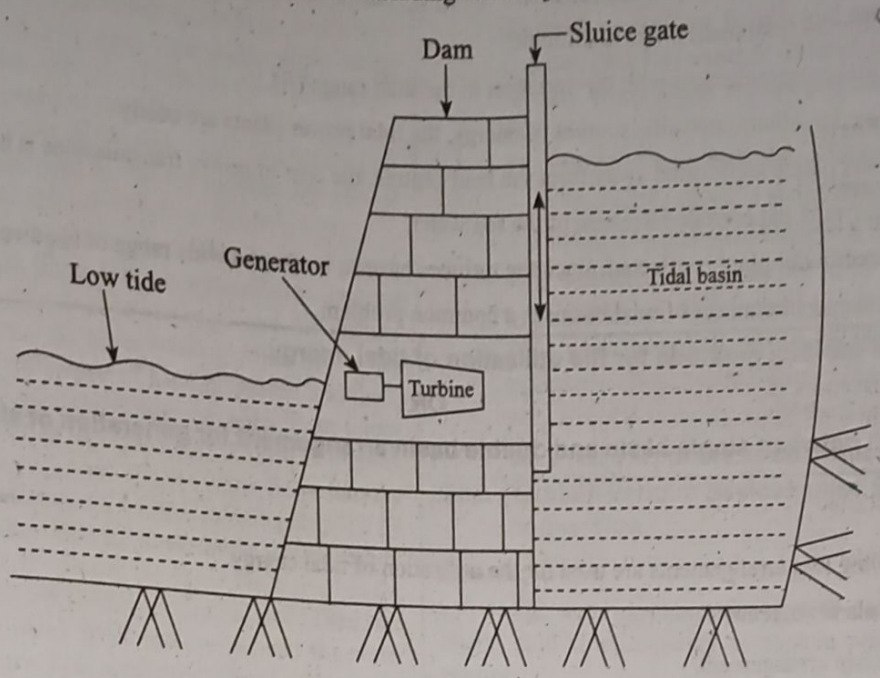

Figure (1) : Power Generation from Low Tide

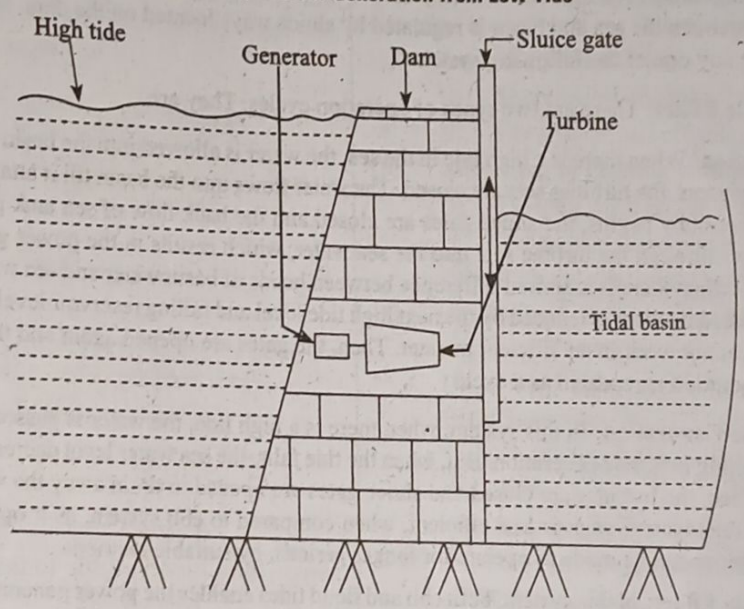

Figure (2) : Power Generation from High Tide

Q61. What are the advantages and limitations of tidal power generation.

Answer :

Advantages of Tidal Power Generation

1. It does not require large area of land.
2. Power generation is free from pollution.
3. Peak power demand can be effectively met, when the tidal power plant works in combination with hydroelectric or thermal power plant.
4. Tidal power does not depend on the rain fall. Thus, there is no uncertainity in tidal energy availability.
5. It is inexhaustible and a renewable source of energy
6. The net cost associated with the tidal plant is less.

Limitations of Tidal Power Generation

1. The construction of tidal plant in sea is difficult.
2. The output tidal energy changes with the variation in the tidal range (R).
3. When compared to other renewable sources of energy, the tidal power plants are costly.
4. The tidal power plants are located away from the load centres, the cost of power transmissions is high.
5. The machinery may get corroded because of the sea water.
6. The efficiency of tidal plant is affected, since the turbines have to work on a wide range of head variation.
10. Sedimentation and silterations of tidal basins is a common problem.

Q62. Explain the various methods for the utilization of tidal energy.

OR

Distinguish between single basin and double basin arrangement for generation of electricity from tidal energy.

Answer : July-21, (ME), (R16), Q8(b)

The following two arrangements are used for the utilization of tidal energy.

1. Single basin arrangement
2. Double basin arrangement.

1. **Single Basin Arrangement:** A single basin arrangement consists of a single basin and a dam that separates the basin with the sea. The flow between the sea and basin is regulated by sluice ways located on the dam. In this system, the power can be generated using any one of the following systems.

(i) **Single Basin Single Effect:** There are two types of operation cycles. They are,

(a) **Ebb Generation:** When there is a high tide in the sea, the water is allowed into the basin by opening the sluice gates. During this process, the turbines sets are closed. The water flows into the basin till it attains the maximum tide level. When the other ebby begins, the sluice gates are closed and the back flow of sea tank place. Then, the water from the basin flows through the turbine sets into the sea water, which results in the power generation. The turbines are operated only when there is a desired difference between heads of basin water and sea water and are made to run till the effective head on them is reduced by the next high tide level and falling reservoir level. When the head is reduced, the turbines cannot work in an efficient manner. Then, the gates are opened again and the turbines are closed. This process of operation is repeated as a cycle.

(b) **Flood or Tide Generation:** In this system, when there is a high tide, the water is passed into the basin through the turbines, resulting in power generation. But, when the tide falls, the sea water level decreases, thus causing no power generation. Then, the turbines are closed and sluice gates are opened to drain away the water in the basin back into the sea. This tide cycle system is less efficient, when compared to ebb system, as it operates for shorter duration. However, turbines can be made to operate for longer periods, by suitable methods.

(ii) **Single Basin Double Effect:** In this system, both ebb and flood tides enables the power generation. The direction of water flow through the turbines during both the tides changes. When the sea is at high tide and reservoir is at low tide level, the filling of basin takes place, while emptying takes place, when the sea is at low tide level and basin is at high tide level. Therefore, both the directions of water flow helps in driving the turbines to generated power.

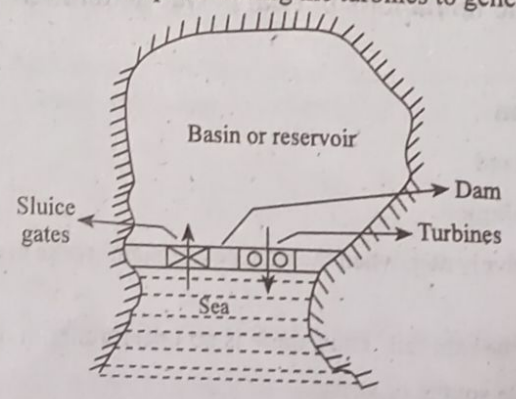

Figure(1) : Single Basin Arrangement

WARNING: Xerox/Photocopying of this book is a CRIMINAL act. Anyone found guilty is LIABLE to face LEGAL proceedings.

Double Basin Arrangement: In double basin arrangement, two basins called upper basin and lower basin are arranged. The water level in the upper basin must be higher than the lower basin, as the difference in their heads can be used to generate the electricity. Similar to single basin arrangement, sluice gates are located on the dam of the two basins and the turbines are placed between the two basins as shown in figure (2).

When there is a high tide, the sluice gates of upper basin are open to allow the sea water into it. During this process, the gates of lower basin and the turbine sets are closed. As the upper basin is filled and lower basin is empty, difference of head is created and then, the turbines are operated. Thus, the water from upper basin flows into lower basin through the turbines, thereby generating electric power. The sea water flows into the upper basin continuously, while it is being emptied by allowing the water into the lower basin till the end of high tide in sea. If water in the upper basin reaches the maximum level, the sluice gates are closed. Then, the sluice gates of lower basin are opened and the water flows into the sea, thus reducing its level with respect to the falling ebb tide. This process is continued till the availability of sufficient head. When the next high tide occurs, the process is repeated.

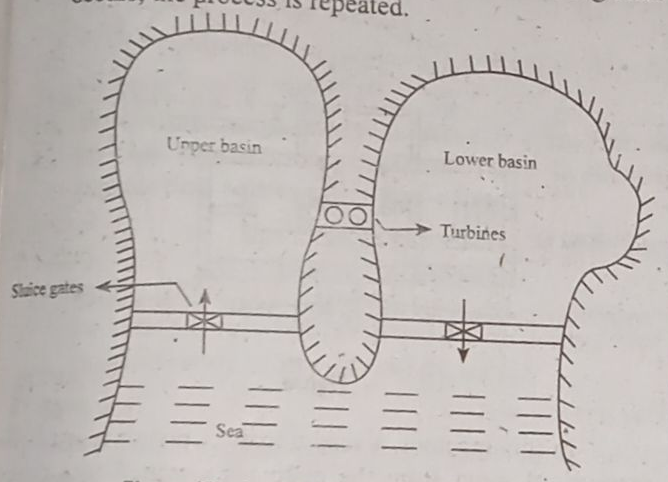

Figure (2) : Double Basin Arrangement

Q63. Explain the working of single basin tidal power plant.

Answer : May-17, (ME), (R13), Q9(b)

For answer refer Unit-IV, Q62, Topic: Single Basin Arrangement.

Q64. Write a short note on the potential of tidal energy in india.

Answer :

Tidal energy is a form of hydropower energy, which uses the energy of the oceanic tides to generate electricity.

India has a long coastline of 7500 km with immense potential for ocean energy.

According to a study by IIT Chennai and CRISIL (an Indian analytical company) in december of 2014, the tidal power potential of the country is estimated at about 12,455 megawatt (MW).

The potential areas of tidal energy are in the Gulf of Khambhat, Gulf of Kutch and southern regions in Gujarat, Palk Bay-mannar Channel in Tamil Nadu, and Hoogly river, South Haldia and Sunderbans in West Bengal.

The estimated potentials are as follows,

1. Gulf of Kambhat is about 7000 MW.
2. Gulf of Kutch near Gujarat is about 1200 MW.
3. Sunderbans is about 100 MW.

India had shown its interest towards the tidal energy in 2011, when the 50 MW tidal energy plant was established in Gujarat. Globally, tidal energy plants are limited with only 500 MW capacity, while the South Korea is leading the actual and planned investments.

Q65. Explain various devices used for wave energy conversion.

Answer : May-13, (R09), Q7(a)

The wave machines are used to convert the potential energy and kinetic energy present in water to mechanical energy.

The different types of wave energy conversions are classified according to the following parameters.

(a) **According to Location**
- (i) Shoreline machines
- (ii) Deep water (or) off shore machines

(b) **According to Position with Respect to Sea Level**
- (i) Floating wave power machine
- (ii) Submerged wave power machine
- (iii) Partially submerged machines

(c) **According to the Actuating Motion used in Capturing the Wave Power**
- (i) Heaving float type
- (ii) Surge type
- (iii) Oscillating water column type
- (iv) Pitching type
- (v) Heaving and pitching float type

Q66. Enlist advantages and disadvantages of wave energy.

Answer :

Advantages of Wave Energy

1. It is free and renewable energy source.
2. The devices associated with wave energy are relatively pollution free, because they extract the energy from waves and leave the water in a placid state.
3. Unlike solar or wind, the wave power devices do not use large land masses.
4. The wave power devices produce electricity, and also protect the coast lines from the damage caused by large waves, minimise erosion, etc.
5. The wind energy is naturally concentrated by accumulation overtime and space, and this energy can be transported from its origin to other locations through the wind.

Disadvantages of Wave Energy

1. Wave energy plants require huge capital investment, maintenance cost, repair and replacement cost.
2. It is difficult to identify the accessible site of large wave activity.
3. The design of wave energy conversion devices is relatively complicated.
4. Lack of dependability.
5. Wave energy converters should be capable of withstanding severe peak stresses during storms.

Q67. Describe the construction and working of any one type of wave energy conversion machine.

Sept.-20, (R16), Q8(a)]

OR

Explain briefly about the construction and working of float wave power conversion device.

Answer : Model Paper, Q9(b)

The wave motion is primarily horizontal, but the motion of the water is primarily vertical. The floats make use of the water motion and produce the mechanical power. In float wave power machines, a large float is driven up and down by the water within relatively stationary guides. This reciprocating motion of the float is converted to mechanical energy and then to electrical power.

Schematic diagram of Martin's float wave power machine is shown in below figure.

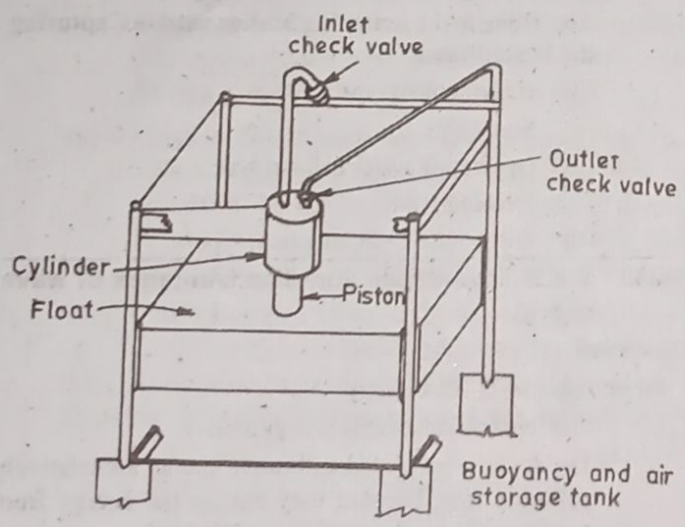

Figure

As shown in figure, the machine consists of four vertical manifolds that are part of the platform and guides a square float that moves up and down with the water. The platform is stabilised by four large under water flotation tanks. The platform supported by buoyancy forces and there is no vertical or horizontal motion due to wave action. Thus, the platform is stationary on the ocean surface.

A piston attached to the float moves up and down inside a cylinder, which is attached to the platform thus it is relatively stationary. Here, the piston and cylinder arrangement acts as a reciprocating compressor.

When the piston moves downward, the air sucked into the cylinder through the inlet chuck valve. The upward motion of the piston compresses the air and is supplied to the four underwater flotation tanks through the outlet check valve and the four vertical manifolds. Therefore, the flotation tank serves dual purpose, buoyancy and storage of air.

The compressed air in the buoyancy - storage tanks is used to run and air turbine, which in turn run an electrical generator to produce electricity. The electricity is transferred to the shore through underwater cable.

Q68. Explain the working principle of high-level reservoir wave machine.

Answer :

The construction and working principle of high-level reservoir wave machine is shown in below figure.

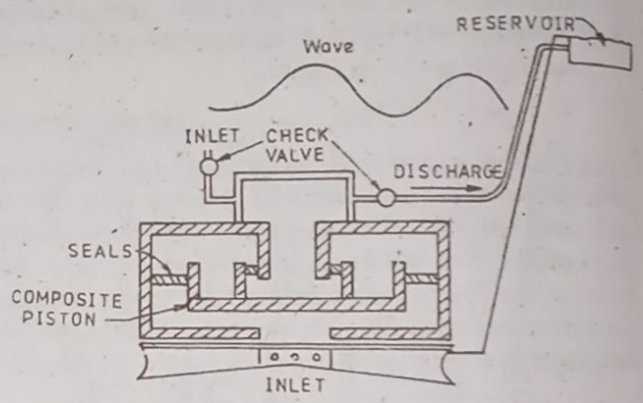

Figure

In this machine a magnification piston is used. The pressurised water from the piston is elevated to a natural reservoir (should be located near the shore line) above the wave generator or to an artificial water reservoir. The water from the reservoir is made to flow through a turbine which is coupled to an electric generator to produce the electricity. Then the water from the reservoir is made to flow back to sea level. With the use of this machine, a generator of 20 m diameter can produce 1 MW power.

Q69. How does the oscillating wave column convert energy into mechanical from?

Answer : May-19, (R15), Q9(b)

Oscillating Water-Column Device

In the oscillating water-column device, a concrete or steel structure is partly submerged. It has an opening to the sea below the water line, and also encloses a column of air above the column of water as shown in below figure.

WARNING: Xerox/Photocopying of this book is a CRIMINAL act. Anyone found guilty is LIABLE to face LEGAL proceedings.

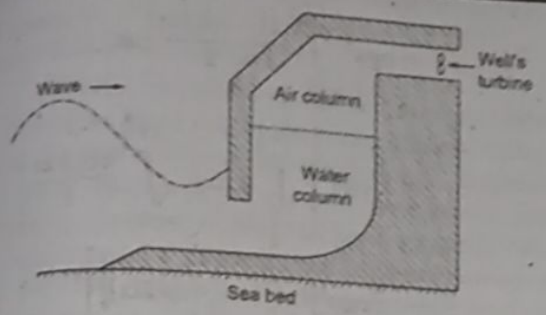

Figure

When the wave strikes on this device, the water column rises and falls alternately and corresponding the air column also compressed and depressurised alternately. The air is made to flow through turbine, which is coupled to a generator. In this type of wave energy systems, axial flow well's turbine, which can be operated with the either directions of air flow is used to extract the wave energy.

The oscillating water column type device has following important advantages.

1. The velocity of air can be increased by reducing the cross section of the air channel. Therefore, the slow wave motion can be effectively used with the high speed turbines to extract the energy.
2. Power producing equipments are kept away from the immediate saline waters.

Q70. Show that wave power is directly proportional to the square of amplitude and inversely proportion to the period of wave.

Sept.-20, (R16), Q8(b)

OR

Show that wave power is directly proportional to the square of amplitude and inversely proportional to the period of wave.

Answer : June-18, (R13), Q9(b)

Note: The question given in University paper is not correct. The question should be,

'Show that wave power is directly proportional to the square of amplitude and to the period of wave'

Consider an ideal deep-water surface wave as shown in figure as,

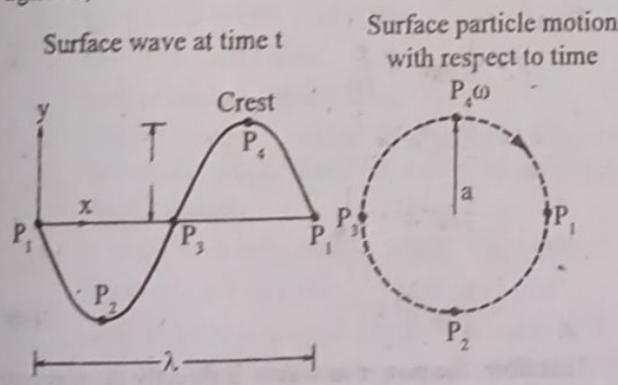

Figure (1)

The motion equation of wave is given as,

$$y = a \sin\left(\frac{2\pi}{\lambda}x - \frac{2\pi}{T}t\right) \quad ...(1)$$

Where,

y – Displacement above mean sea level

a – Amplitude of wave

λ – Wave length of wave

T – Time period of wave

t – Time of travel.

The equation (1) can also be written as,

$$y = a \sin(kx - wt) \quad ...(2)$$

Where,

Wave number, $K = \frac{2\pi}{\lambda}$

Angular frequency, $\omega = \frac{2\pi}{T}$ rad/s

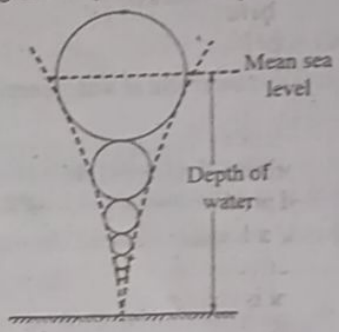

Figure (2)

When wave moves in linear direction, i.e., along x – axis, every particle of water at the surface undergoes a circular motion with radius 'a' (amplitude of wave) and angular speed ω.

This type of motion is observed when a body is suspended in the water. The figure (2) shows the cross section of water column, in which the radius of circular motion of water particle decreases continuously as it travels to deep and becomes zero at the see bed. Hence, when the wave propagates in the x – direction, net flow of water is zero.

The wavelength of the wave in given as,

$$\lambda = \frac{2\pi g}{\omega^2} \quad ...(3)$$

Then, $\omega = \sqrt{\frac{2\pi g}{\lambda}}$

The time period of wave motion is given as,

$$T = \frac{2\pi}{w} = \frac{2\pi}{\sqrt{\frac{2\pi g}{\lambda}}} = \sqrt{\frac{2\pi\lambda}{g}} \quad ...(4)$$

The linear velocity of the particle at the crest of the wave is given as,

$$v_0 = a\omega$$

The wave velocity in the x – direction is given as,

$$v = \frac{\omega\lambda}{2\pi} = \frac{\lambda}{T} = \frac{\omega}{k} = \frac{g}{\omega} \quad ...(5)$$

From equation (5), it is observed that the wave velocity is independent of amplitude.

Consider unit width of the wave front perpendicular to the direction of motion of wave as shown in figure (3).

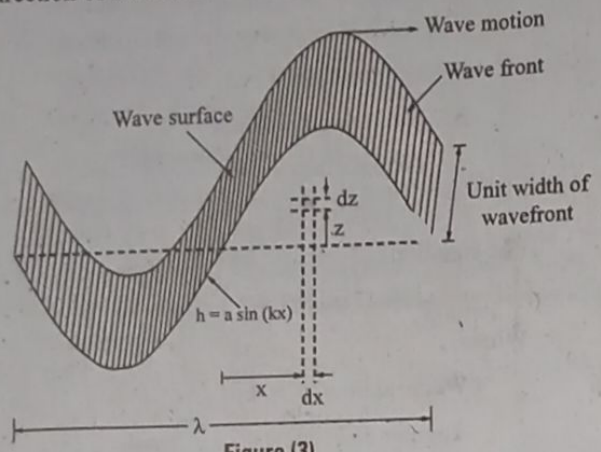

Figure (3)

Ab time, $t = 0$

The vertical displacement at water particles in given as,

$$h = a \sin (kx)$$

Consider an element of water with thickness 'dx' and height 'dz', which is at a distance x and height z.

Mass of the water element, $dm = \rho.dx.\ dz.1$

$$\therefore\ dm = \rho dxdz$$

If the element moved from $-z$ to $+z$, then the potential energy of the element is given as,

$$dE_P = (\rho dxdz)g \times 2z \qquad (\because P{:}E = mgh)$$

Then, the total potential energy of wavefront per one wave length is given as,

$$E_P = \int_{x=0}^{x=\frac{\lambda}{2}} \int_{z=0}^{z=h} dE_P$$

$$= \int_{x=0}^{x=\frac{\lambda}{2}} \int_{z=0}^{z=h} (\rho dxdz)g2z$$

$$= \rho g \int_{x=0}^{x=\frac{\lambda}{2}} \left(2.\frac{z^2}{2}\right)_0^h dx$$

$$= \rho g \int_{x=0}^{x=\frac{\lambda}{2}} h^2 dx$$

$$= \rho g \int_{x=0}^{x=\frac{\lambda}{2}} a^2 \sin^2(kx)$$

$$= \rho g a^2 \int_{x=0}^{x=\frac{\lambda}{2}} \sin^2(kx)dx.$$

$$= \rho g a^2 \int_{x=0}^{x=\frac{\lambda}{2}} \frac{(1-\cos 2kx)}{2} dx$$

$$= \frac{1}{2}\rho g a^2 \left[\int_{x=0}^{x=\frac{\lambda}{2}} 1.dx - \int_{x=0}^{x=\frac{\lambda}{2}} \frac{\cos 2\,kx}{2}\right]$$

$$= \frac{1}{2}\rho g a^2 \left[(x)_0^{\frac{\lambda}{2}} - \frac{1}{2k}[\sin 2kx]_0^{\frac{\lambda}{2}}\right]$$

$$= \frac{1}{2}\rho g a^2 \left[\frac{\lambda}{2} - \frac{1}{2k}\left[\sin 2k\frac{\lambda}{2} - \sin 0\right]\right]$$

$$= \frac{1}{2}\rho g a^2 \left[\frac{\lambda}{2} - \frac{\lambda}{2.2\pi}[\sin 2\pi - 0]\right]$$

$$= \frac{1}{2}\rho g a^2 \left[\frac{\lambda}{2} - 0\right]$$

$$\therefore\quad E_p = \frac{1}{4}\rho g a^2 \lambda \qquad ...(6)$$

Potential energy per unit length and per unit width of wave front (i.e., per unit surface) is given as,

$$E_P = \frac{1}{4}\rho g a^2 \qquad ...(7)$$

In harmonic motion, the potential and average kinetic energies are equal.

$\therefore$ Kinetic energy per unit area, $E_k = \frac{1}{4}\rho g a^2$ ...(8)

Total energy per unit surface area is,

$$E = E_P + E_k$$

$$= \frac{1}{4}\rho g a^2 + \frac{1}{4}\rho g a^2$$

$$= \frac{1}{2}\rho g a^2 \text{ J/m}^2$$

Then, the power carried forward per unit width of wave front,

$$P = Eu$$

$$= \frac{1}{2}\rho g a^2 \times \frac{v}{2} \text{ W/m} \qquad ...(9)$$

Where, $u = \frac{v}{2}$ is group velocity of deep water waves.

Then,

$$P = \frac{1}{2}\rho g a^2 \times \frac{g}{2\omega}$$

$$= \frac{1}{4}\rho g^2 a^2 \times \frac{1}{\omega}$$

$$= \frac{1}{4}\rho g^2 a^2 \times \frac{1}{\frac{2\pi}{T}}$$

$$= \frac{1}{4}\rho g^2 a^2 \times T \qquad ...(10)$$

Therefore, the power in waves is directly proportional to the square of the amplitude and to the period of wave.

WARNING: Xerox/Photocopying of this book is a CRIMINAL act. Anyone found guilty is LIABLE to face LEGAL proceedings.

Q71. Write about wave power development in India. May-15, (R09), Q7(a)

Answer :

Wave Power Development

In 1799, Girard filed a patent about the proposal of developing wave machines. He visualised a wave machine by connecting a floating anchored ship to the mechanism and pump, which is placed on the shore using a rod. With the help of mechanism used, the ship exhibits oscillating motion in vertical direction, whereas the horizontal movement is restricted. This oscillating motion of the shaft or rod was then converted into rotary motion with the help of mechanism, by which the pumps are driven. Oceanographers and physicists further examined this wave phenomenon during 1890s. Then, for experimentation purposes, a small sample or model of different types of wave machines were built in the countries like USA, UK, Japan and Canada in the period 1910 to 1950. And, in 1959, a pumped storage system with the capacity of 5 MW was setup. Later, in 1965, due to the decrease in oil prices, it became insignificant. During 1976, the assessment of the scheme has been done and the proposal of constructing 20 MW system was approved. Then, many models of plants with capacities 100 to 500 kW were constructed after 1973, due to the rise in oil prices. Small capacity wave power engines are used for installation purposes on light houses, remote islands, etc., which are marketed by Japan. Also, large base load power plants were used in 'Mauritius' in 1976.

Wave Power Development in India

The various zones around India with higher wave energy potential and suitable for wave power development are shown in the figure.

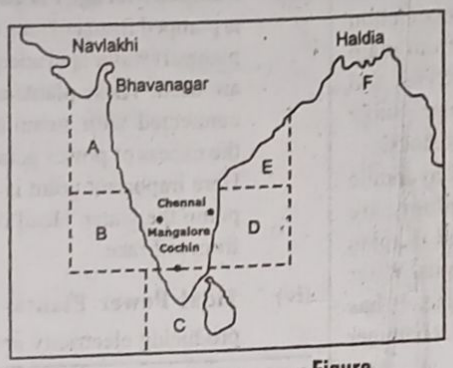

A,B, C, D, E, F - Zones of wave power around India

Figure

The potential of wave energy varies from west coast to east coast as per the estimation of wave energy distribution estimation. It is of 39 kW and 15 kW on the west and east coasts respectively. According to the average estimation, the total potential of power on a 6000 m coastline with 15 kW/m potential is 90000 MW.

4.2.3 Mini-Hydel Power Plants – Economics

Q72. What are the types of hydroelectric power plants?

Answer :

Hydroelectric power plants are classified based on the following parameters,

1. **Purpose**

   Hydroelectric power plant may be for single purpose i.e., only electric power production or as multi purpose plant which includes flood control, irrigation, drinking water, fisheries, tourism and navigation purpose in addition to electric power production.

2. **Location and Topography**

   (i) Plain or hilly area plants

   (ii) Low land plants

   (iii) Mountain region plants.

   Hydropower plants are mostly located in hilly and mountain areas in order to obtain different advantages such as ease in the construction of dams, large capacity reservoirs, irrigation and other multi-purpose applications.

3. **Plant Capacity**

   Mini hydroelectric plants: 100 kW upto 2 MW

   Small hydroelectric plants: 2 MW to 15 MW

   Medium hydroelectric plants: 15 MW – 100 MW

   High capacity hydroelectric plants: 100 MW – 1000 MW

   Super hydroelectric plants : Above 1000 MW.

4. **Civil Constructional Features**

(i) **Run off River Plants:** These are installed along the main stream of river, with or without reservoir formation.

(ii) **Valley Dam Plants:** These may be constructed to create water storage and this power plant is located at foot of dam. Water is stored during floods season and is used for remaining period for different purposes apart from hydroelectric power production.

(iii) **Diversion Canal Distribution Plants:** These are such plants, in which water is diverted from river through canal to power house, located little faraway from water source. After water is used for power generation, water is let out down stream of plant and again connected to main river at down stream point.

5. **Available Head**

(i) **High Head Plants (H > 100 m):** If hydraulic head is more than 100 m the plants are known as high head plants. Even sometimes head closes to 2000 m, safe spillways are very much needed for such plants. Pelton wheel is employed as prime mover. Water from main reservoir is first carried by tunnel upto surge tank and then carried through penstock to power house. Surge tank reduces the water hammer effects on penstock.

(ii) **Medium Head Plants (30 ≤ H < 100 m):** If hydraulic head is between 30 and 100 m, power plants are categorized as medium head plants. Francis, Kaplan turbines are used as prime movers in these plants. Water is carried through penstocks to power house. It has forebays as temporary reservoirs to reduce water hammer on penstock.

(iii) **Low Head Plants (H ≤ 30 m):** If hydraulic head is below 30 m, then it is low head plant. Head is low, thus water is not carried through penstock to power house. But, power plant is located near dam itself. No surge tank is required, Propeller and Kaplan turbines are used.

6. **Operation or Duty**

(i) **Base Load Plants:** Plants supplying base loads which is generally constant and runs non-stop are known as base load plants. These are of greater capacity. Run of river and storage type power plants are used. As basic load plants load factor is very high.

(ii) **Peak Load Plants:** These plants supply power at peak load time i.e., when load is more than average load. Run of river plants with pondage and pumped storage plants are used as peak load plants. They store water during off peak time and supply for peak hours. Load factor is low when compared to base load plants.

7. **Quantity of Water Available or Hydraulic Consideration**

(i) **Run off River Plants**

(a) **Run off River Plants with Pondage:** Pondage refers to collection of water behind dam and increases stream capacity for short periods. It has flexibility to meet hourly demand. Discharge is 3 to 8 times more. Pondage increases stream capacity for short time periods. They can meet peak load demands and used as base load plants.

(b) **Run off River Plants Without Pondage:** Pond is not provided to increase stream capacity. Dam will be used only to rise hydraulic head and thereby supplying water for some other tasks. In case stream flows are high and if sufficient water remains after supplying for other task, it is used for power production though of low levels. Power produced is seasonal. Its utility is very less compared to other plants due to non uniformity of supply.

(ii) **Storage Plants:** These plants have large reservoirs to facilitate storage of water and thus it is independent of seasonal streams. Stream flows are considerably higher than natural flow. This plant can be used as base load as well as peak load plant alternatively. Majority of plants are of these types.

(iii) **Pumped Storage Plants:** Name itself indicates, the water is pumped from tail race to higher level reservoirs in these plants. If water is in adequate for power generation, these are used. These plants are not operated singly but inter connected with steam/diesel power plants. Generally, the excess of power generated is used to run such plants. Here important point is that generating turbine can also pump the water. Head is generally from 30 m to 300 m from tail race.

(iv) **Tidal Power Plants:** Utilizes sea tidal energy for producing electricity not much capacity available now.

Q73. Write about the importance of small hydro power plants.

Answer :

Importance of Small Hydro Power Plants

The various factors that contribute for the importance of small hydro power plants are as follows,

1. **Environmental Aspects**

As the hydropower plants do not release any heat and pollutants during power generation, these plants are environmental friendly (non-polluting).

2. **Investments and Operating Costs**

Small hydro plants do not require huge machines and skilled operators. Thus, the investment and operating costs are very less.

3. **Continuous Energy**

It is a continuous process of power production, as the resources do not deplete and is always renewed by nature (by hydrological cycle).

4. **Distribution Losses**

In small hydro plants the distribution losses are highly reduced and energy can be supplied to rural consumers. Small hydro plants are ideal decentralized source of power generation.

WARNING: Xerox/Photocopying of this book is a CRIMINAL act. Anyone found guilty is LIABLE to face LEGAL proceedings.

5. **Voltage Profile and Utilization Factor**

The voltage profile of a small hydro plant can be improved by sychronizing it with the utility grid. Thus, the utilization factor of the plant is increased. Thus, the plant becomes more economical.

6. **Disturbances by Location**

Generally, these plants are located on canals and irrigation systems. Thus, these plants do not cause any disturbances to the nearby areas.

Q74. Draw a neat sketch of a typical arrangement of a small hydropower station and identify the basic components.

Answer :

The typical arrangement of a small hydropower station is schematically shown in below figure.

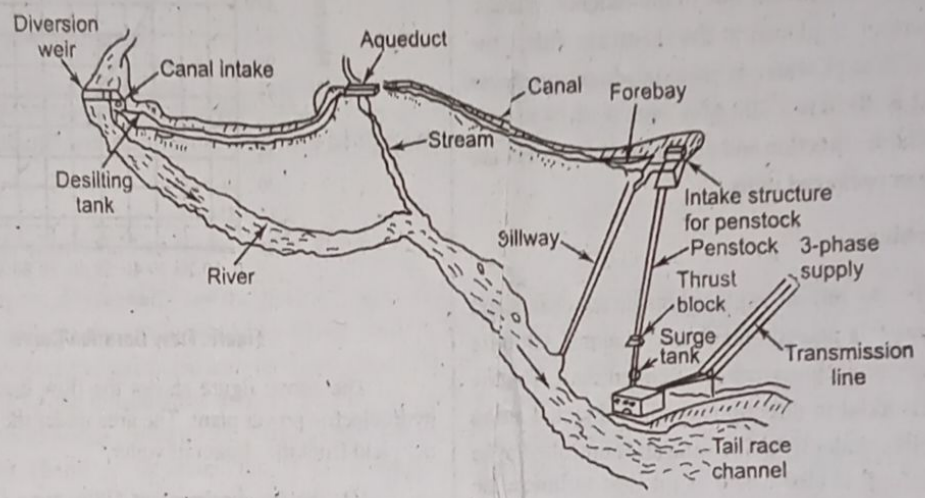

Figure

The basic and important components of a hydroelectric schemeare as follows,

1. Diversion and intake
2. Desilting chamber
3. Water conductor system
4. For bay or balancing reservoir
5. Pen stock
6. Surge tank
7. Power house

Q75. List out the types of turbines for small hydro power plants and explain them.

Answer :

July-21, (EEE), (R16), Q8(b)

Power plant that produces power upto 5000 kW are generally called small hydro plant. The various turbines that are used in these power plant are classified according to the arrangement with the generator. They are,

1. Bulb or tubular turbine
2. Tube turbine and
3. Straflo turbine.

1. **Bulb or Tubular Turbine**

In this type, the generator and turbine are either directly connected by a shaft or a gear set. This set is kept inside a closed conduit which is water tight casing (bulb). This conduit is placed in the water channel through which water is passed from head race to tail race. A support is provided to the conduit at the centre.

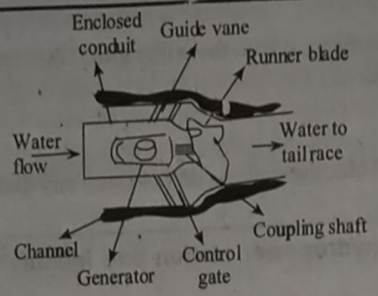

Figure (1): Bulb Turbine

This turbine is a propeller type or Kaplan typeand is placed at the downstream side of the channel. Wereas, the generator is placed at the upstream side f the channel. Flow of water is in axial direction. ower generated is 40 MW - 200 MW with 3 m-18 mvater head available. Erection and dismantling is easiers are available in packaged units.

2. **Tube-turbine**

In this type, the turbine is placed inside the channeand the generator is placed outside the channel. Botl are connected using a horizontal or inclined shaft. Thelow of water is axial in direction which is directed amng the propeller blades by guide vane and controlled bythe control gate. It is also called as pit type turbine as he generator is placed in a pit.

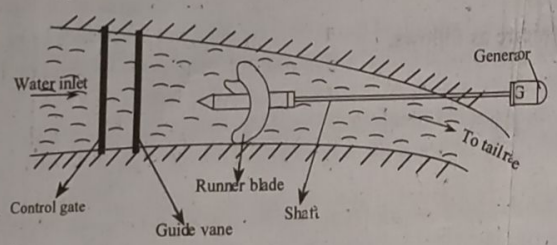

Figure (ii): Tube Turbine

3. **Straflo Turbine**

This is similar to the bulb turbine. In this, ples are attached on the periphery of turbine runner Hence, no separate rotor ir required for generator. Inorder to avoid water from entering into poles, a specialzed seal arrangement is provided. The direction of flowof water is axial and the shaft is in horizontal direction

Q76. How primary and secondary power of a hydro power plant is estimated?

Answer :

Primary Power

In an hydro electric power plant, the minmum power produced in an entire year is known as "PrimaryPower". It is also known as "firm power".

Secondary Power

The power generated apart from firm power and that to only for a part of year is known as "Secondary power". This secondary power is provided with the help of storage.

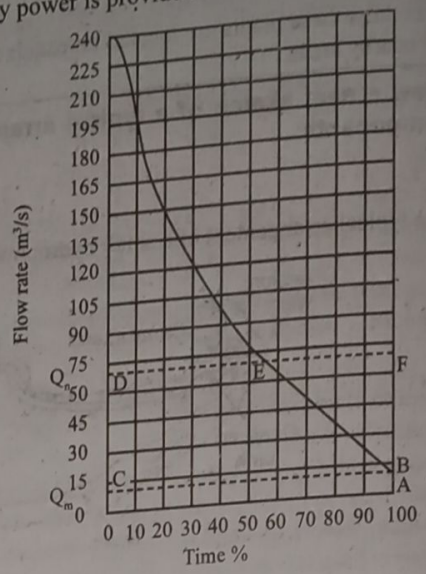

Figure: Flow Duration Curve

The above figure shows the flow duration curve of a hydroelectric power plant. The area under the curve shows the net yield from the stream of water.

'Q_m' be the discharge at 100% time i.e., flow rate all through the year. The power produce is very less and OABC represents the total firm power produced with discharge 'Q_m'.

In order to increase the power, the discharge should be increased to 'Q_n' (represented by demand line DEF) and this can be done only by providing a storage. BFD represents the storage provided to the hydro electric power to add more power to the available firm or primary power.

Thus secondary power is generated and is represented by CBED on the flow duration curve. Hence, primary and secondary power can be estimated through flow duration curve of a particular plant.

Primary power = OABC

Secondary power = CBED.

Q77. What are the advantages and limitations of small scale hydro-electric power generation?

Answer :

Advantages of Small Scale Hydro-electric Power Generation

The advantages of small scale hydroelectric power generation are,

1. Compared to other conventional energy generation machines, the small scale hydro power plants have low gestation period ranging from 8 to 24 months.
2. The cost of operation is low.

WARNING: Xerox/Photocopying of this bok is a CRIMINAL act. Anyone found guilty is LIABLE to face LEGAL proceedings.

3. The energy sources are non-polluting and no heat is released.
4. There is no consumption of electrical energy by the generator, because the generator uses renewable resources which are always available by the means of hydrologic cycle of environment.
5. Small scale hydroelectric plants a perfect source of decentralised energy generation.
6. When synchronised with utility grids, the voltage profile of the plant is improved.

Limitations of Small Scale Hydro-electric Power Generation

1. The capital cost per kW is high.
2. Maintenance and administrative costs are high.
3. Operation of isolated system is unstable due to low inertia.
4. Relatively low utilisation.
5. Difficulty in site identification, preparation of reports, proper construction planning etc.

Q78. Explain about the economic aspects of mini hydel power plant.

Answer : July-19, (R15), Q8(b)

Economic aspects of Small/Mini Hydel Power Plant

In India, by employing skills and materials which are available locally, it is possible to design and manufacture components such as floating mills, Himalaya mills and hydraulic rams. Turbines for different small hydro power plants shown in the table below, can be manufactured in Bhopal and Haridwar plants of BHEL (Bharat Heavy Electricals LTD), and Jyoti Ltd., Baroda plant. Purpose of setting up the independent small hydel power plant is an important economic consideration. If an independent plant is installed for power development alone, then construction costs involved will high. Cost of such plants per kW installed will be around Rs. 18000. Therefore, for these plants to be economically successful, they should be setup as multi-purpose plants which can be used for irrigation and other purposes in addition to power generation. Geographical location of the plant also affects the cost of the plant. Head available at top of the hill will be more when compared to that at bottom. Cost of the equipment increases with decrease in the available head. For example, the cost of equipment for one horizontal tubular turbine operating at 3 m head and generating 3.2 kW power may be around Rs. 1.2 lakhs. Thus cost per kW installed will be Rs. 40000. Even though construction costs depends on site of plant installation, it will be 30% of equipment cost. Therefore, total cost per kW installed will be as high as Rs. 52000. But 1 kWh power generation from these plants is less expensive when compared to that of pumped storage hydro power plants. Because the equipment cost, operation cost and maintenance cost are less and cost involved in pumping the water is eliminated. Following table indicates the range of operation of various hydraulic turbines.

Turbine Type	Range of Power Generation (kW)	Range of Operating Head (m)
Pelton	50-6000	100-400
Francis	50-3000	20-200
Turgo impulse	25-3000	50-200
Kaplan	10-6000	2-30
Horizontal tubular	10-6000	2-25