PROJECT PORTFOLIO

Jainish Mehta

LengthCV

This side project involved using OpenCV, Python, SciPy, NumPy, and image processing to draw contours on an image of an object and find its dimensions using a coin as a reference object. This was done using pixel-per-metric analysis. Upon experimentation, it was accurate up to 90-92% of the time!

Technical skills:

- Python
- OpenCV, NumPy, SciPy
- git (Github)

Self-Navigating Smart Cane: Obstacle Detection Using SLAM and Robotic Sensors

- Working with group of 4 to assist visually-impaired individuals by developing a self-navigating smart cane. Smart cane detects objects around it, has road sign detection and will include haptic and audio feedback.
- Worked on object detection for road signs for a smart cane. Using YoloFastestV2 pre-trained deep learning model for object classification and detection, as evaluated through the BAAI-VANJEE benchmark dataset. LiDAR-based SLAM is used for constructing a map of unknown algorithm while keeping track of agent's location within it.

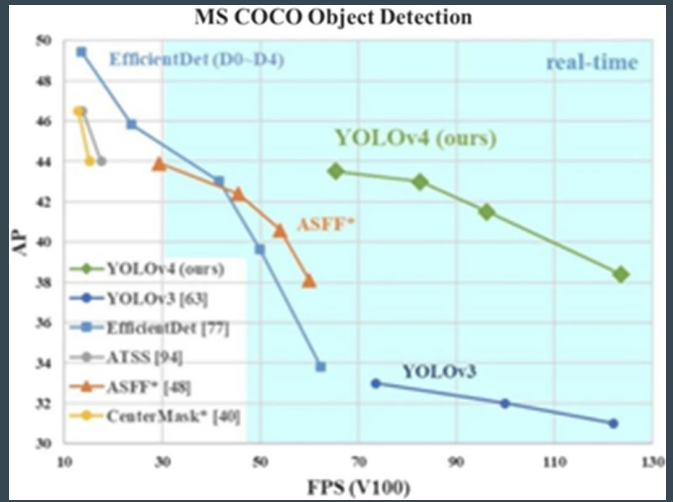

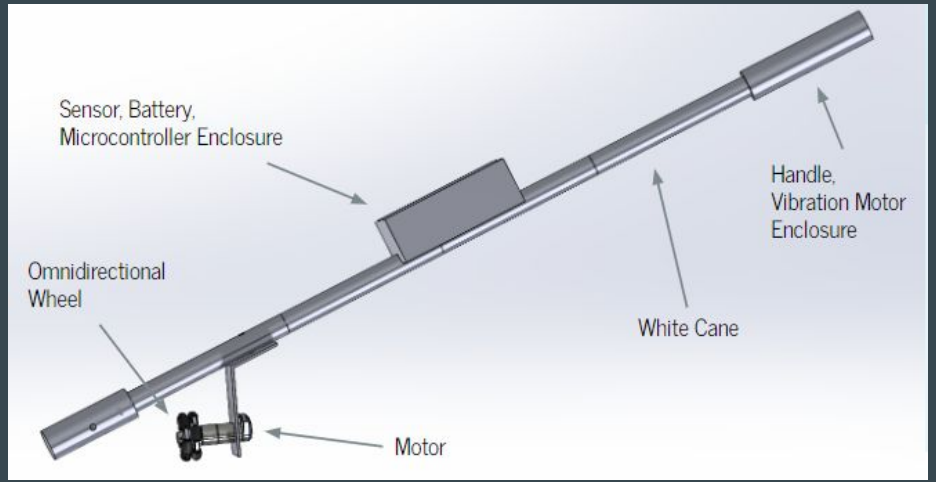

Research Paper on Multi-Class Classification Methods on MolData Drug Discovery

- I used diverse machine learning models and novel neural networks to evaluate the MolData drug discovery dataset, which consisted of 16 diseases (features) and 14 protein targets.
- Cleaned the data by removing duplicate observations, handling unwanted outliers, handling missing data, and creating a consistent format. I performed SMOTE for class balancing.
- Used KNN classification, decision tree classification, ensemble modelling, and SVM with hyperparameter tuning for the gammas and kernels for SVM.
- I also used neural networks for evaluation, including radial function neural networks, MLPs, Extreme Learning Machines (ELM), and hyperparameter tuning using different loss function, activation functions, and learning rates.
- Evaluated the training and test loss and accuracy over epochs and determined the ELM had the highest performance accuracy.

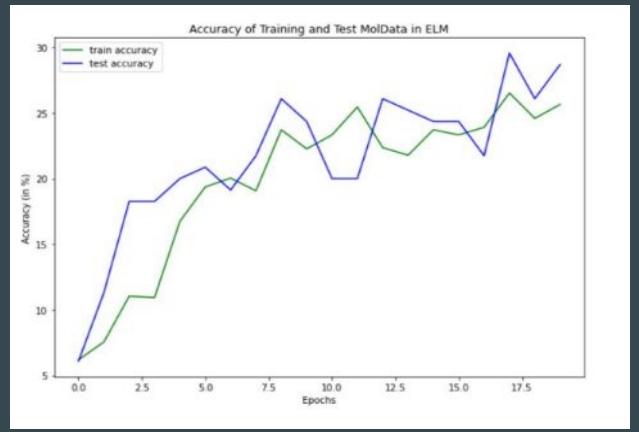

Technique	Accuracy (in %)	MSE
NAdam (Nesterov)	34.9	3.7
AdaDelta	17.6	22.9
Adam	36.8	24.2

Table 3 Performance of ELM with Optimizers

Research Paper on Continual Learning in Social Robotics

- Second author in research paper for continual learning in human-focussed human-robot interactions. Published to IEEE RO-MAN 2023. **“How do Human Users Teach a Continual Learning Robot in Repeated Interactions?”**
- I established criteria for labeling different behaviors, emotions, or responses during the interaction.
- Developing a virtual simulation environment using Webots and ROS2.
- Programming the simulated environment to replicate various interaction scenarios.
- Collecting and organizing labelled data from human-robot interactions.

HealthInfo RAG

- Created a RAG to enhance treatment information for common diseases using web scraping from Mayo Clinic and WebMD. Involved vectorizing documents, creating embeddings, and to do a semantic search within a vector store to eventually create a question answer chain.

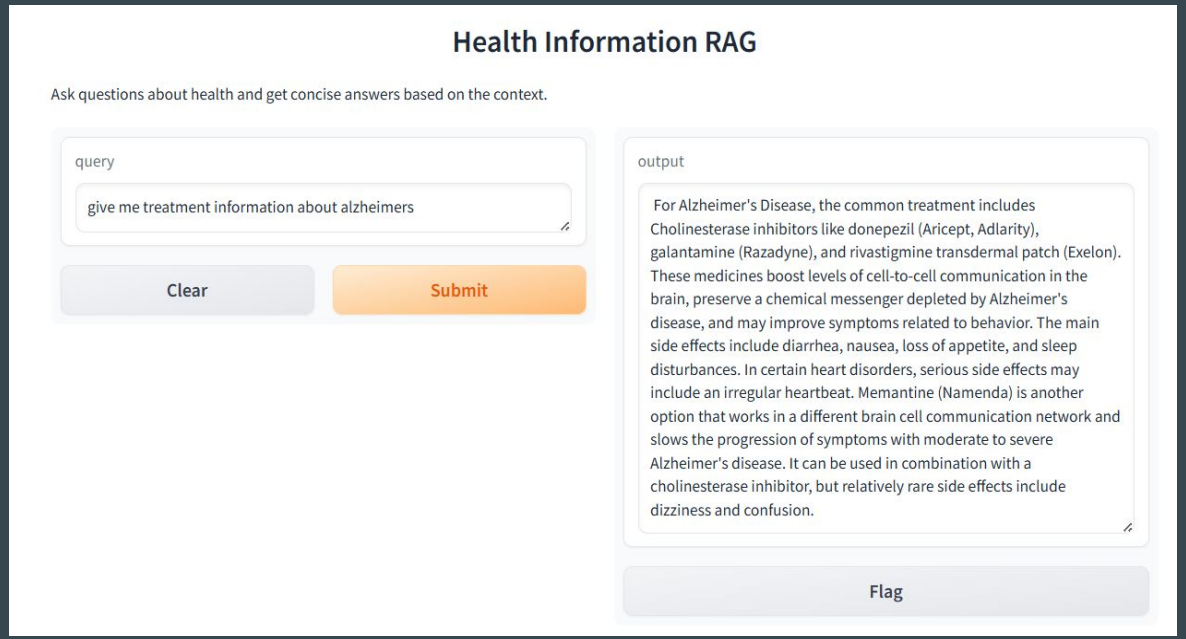

Technical skills:

- Python
- Selenium
- LangChain
- Gradio