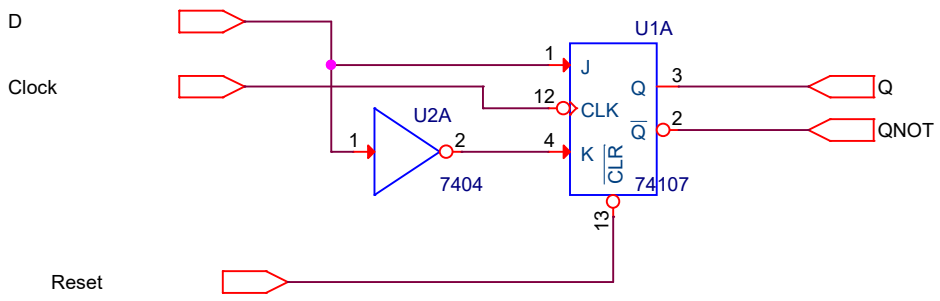

Title	Jake Billings	
Size A	Document Number D_FROM_JK	Rev 0
Date: Monday, November 13, 2017	Sheet 1 of 1	