Chapter 4 Time-Varying Fields and Maxwell Equations

Jake W. Liu

4.1 Maxwell Equations
4.1.1 Faraday's Law
4.1.2 Continuity Equation
4.1.3 Ampère-Maxwell's Law
4.1.4 Integral and Differential Form
4.2 Electromagnetic Matching Conditions
4.3 Potential Functions
4.4 Wave Equations
4.5 Time-Harmonic Form
4.6 Poynting's Theorem

4.1 Maxwell Equations

So far, we have considered only static fields with no time variation. In this chapter, we explore the effects of introducing time-varying fields into Maxwell's equations.

4.1.1 Ampère-Maxwell's Law

When there exists time varying magnetic field, we modify the curl equation for electric field in the electrostatic case according to Faraday's law as (postulate)

$$\begin{cases} \oint_C \vec{E} \cdot \vec{l} = -\dfrac{d}{dt} \displaystyle\int_S \vec{B} \cdot \vec{s} \\ \vec{\nabla} \times \vec{E} = -\partial_t \vec{B} \end{cases} \tag{4.1.1}$$

It is noted that $\vec{E}$ is no longer conservative. Define $\mathcal{V} = \oint_C \vec{E} \cdot \vec{l}$ as the electromotive force (emf) induced in the circuit and $\Phi = \int_S \vec{B} \cdot \vec{s}$ as the magnetic flux passing the surface, then we get

$$\mathcal{V} = -\frac{d\Phi}{dt} \tag{4.1.2}$$

which is known as the Lenz's law. The minus sign in (4.1.2) indicates that the induced emf tends to "counter-react" the change of magnetic flux. It is noted that for $\mathcal{V}$ to be non-zero, either $\vec{B}$ and/or $\vec{s}$ must be time-varying. Thus, three cases can be considered:

i. stationary $\vec{s}$ with time-varying $\vec{B}$
ii. time-varying $\vec{s}$ with stationary $\vec{B}$
iii. time-varying $\vec{s}$ with time-varying $\vec{B}$

We will cover these three situations with three following examples.

Case i: stationary $\vec{s}$ with time-varying $\vec{B}$

□ **<u>Example 4-1</u>** <u>(cf. Cheng 7-1)</u>

A circular loop with N turns of conducting wire is positioned in the xy-plane, centered at the origin. It is placed in a magnetic field given by $\vec{B} = \hat{z}B_0 \cos\left(\frac{\pi r}{2b}\right)\sin(\omega t)$ where b is the radius and ω is the angular frequency. Determine the emf induced in the loop.

Solution

$$\Phi = \int_S \vec{B} \cdot d\vec{s} = \int_0^{2\pi}\int_0^b B_0 \cos\left(\frac{\pi r}{2b}\right)\sin(\omega t) r dr d\theta$$
$$= \frac{8b^2}{\pi}\left(\frac{\pi}{2} - 1\right) B_0 \sin(\omega t)$$
$$\mathcal{V} = -N\frac{d\Phi}{dt} = \frac{8Nb^2}{\pi}\left(\frac{\pi}{2} - 1\right) B_0 \sin(\omega t)$$

Note: $\int x \cos x \, dx = \int x d \sin x = x \sin x + \cos x$.

Case ii: time-varying $\vec{s}$ with stationary $\vec{B}$

□ **<u>Example 4-2</u>** <u>(cf. Cheng 7-2)</u>

A metal bar moves with a constant velocity $\vec{u}$ along a pair of conducting rails in a uniform magnetic field $B_0\hat{z}$ as shown in the figure. Determine the emf in the loop.

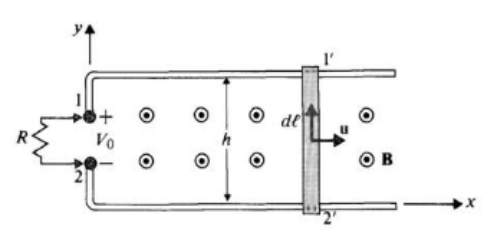

Solution

$$\mathcal{V} = -\frac{d\Phi}{dt} = -\frac{d}{dt}(B_0 \cdot x \cdot h) = -B_0 h \frac{dx}{dt} = -B_0 h u$$

Case iii: time-varying $\vec{s}$ with time-varying $\vec{B}$

□ **<u>Example 4-3</u>** <u>(cf. Cheng 7-4)</u>

A rectangular conducting loop of dimensions $h \times w$ is placed in a time-varying magnetic field $\vec{B} = B_0 \sin(\omega t)\,\hat{y}$. The normal to the loop initially forms an angle α with $\hat{y}$, as shown in figure.
Determine the induced emf in the loop:
(a) when the loop is stationary, and
(b) when the loop rotates about the x-axis with an angular velocity ω.

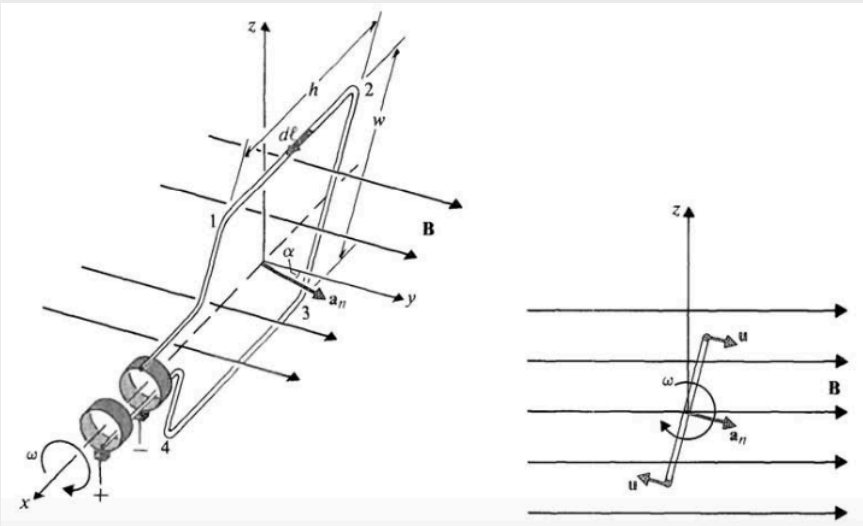

Solution

(a)

1. $\Phi = \int \vec{B} \cdot d\vec{s} = B_0 \sin(\omega t)\,\hat{y} \cdot hw\hat{n} = B_0\, hw \sin(\omega t) \cos\alpha$

2. $\mathcal{V} = -\frac{d\Phi}{dt} = -B_0\, hw\omega \cos(\omega t) \cos\alpha$

(b)

1. $\alpha = \omega t$, $\Phi = B_0\, hw \sin(\omega t) \cos(\omega t)$
2. $\mathcal{V} = -\frac{d\Phi}{dt} = -B_0\, hw\omega \cos(2\omega t)$

So far, we have incorporated the time-varying magnetic field into Maxwell equations. The next step is to introduce the time-varying electric field. We begin by presenting the continuity equation.

4.1.2 Continuity Equation

From circuit theory, the relation between the current I and charge Q is

$$I = -\frac{dQ}{dt} \tag{4.1.3}$$

From a field point of view, for any fixed volume V enclosed by a surface S, we have $I = \oint_S \vec{J} \cdot d\vec{s}$ and $Q = \int_V \rho dv$. Substituting these back into (4.1.3):

$$\oint_S \vec{J} \cdot d\vec{s} = \int_V \vec{\nabla} \cdot \vec{J} dv = -\frac{d\int_V \rho dv}{dt} = \int_V -\partial_t \rho dv$$

and we get the continuity equation in differential form

$$\vec{\nabla} \cdot \vec{J} = -\partial_t \rho \tag{4.1.4}$$

4.1.3 Ampère-Maxwell's Law

Ampère's law introduced for the magnetostatic case $\vec{\nabla} \times \vec{H} = \vec{J}$ should be revised since $\vec{\nabla} \cdot \vec{\nabla} \times \vec{H} \equiv 0$ but $\vec{\nabla} \cdot \vec{J} = -\partial_t \rho$. An additional term $\partial_t \vec{D}$ (displacement current) is introduced by Maxwell to the Ampère's law to "fix" this inequality

$$\vec{\nabla} \times \vec{H} = \vec{J} + \partial_t \vec{D} \tag{4.1.5}$$

This is the Ampère-Maxwell's law. Noted that the divergence of right-hand side now $\vec{\nabla} \cdot \vec{J} + \vec{\nabla} \cdot \partial_t \vec{D} = \vec{\nabla} \cdot \vec{J} + \partial_t \vec{\nabla} \cdot \vec{D} = \vec{\nabla} \cdot \vec{J} + \partial_t \rho \equiv 0$.

4.1.4 Integral and Differential Form

To summarize, we have the full set of Maxwell equations in integral form is

$$\oint_C \vec{E} \cdot d\vec{l} = -\frac{d}{dt}\int_S \vec{B} \cdot d\vec{s} \tag{4.1.6a}$$

$$\oint_C \vec{H} \cdot d\vec{l} = \int_S \vec{J} \cdot d\vec{s} + \frac{d}{dt}\int_S \vec{D} \cdot d\vec{s} \tag{4.1.6b}$$

$$\oint_S \vec{D} \cdot d\vec{s} = \int_V \rho \, dv \tag{4.1.6c}$$

$$\oint_S \vec{B} \cdot d\vec{s} = 0 \tag{4.1.6d}$$

And the differential form of Maxwell equations:

$$\vec{\nabla} \times \vec{E} = -\partial_t \vec{B} \tag{4.1.7a}$$

$$\vec{\nabla} \times \vec{H} = \partial_t \vec{D} + \vec{J} \tag{4.1.7b}$$

$$\vec{\nabla} \cdot \vec{D} = \rho \tag{4.1.7c}$$

$$\vec{\nabla} \cdot \vec{B} = 0 \tag{4.1.7d}$$

Note that there are two curl equations and two divergence equations. The left-hand sides of these equations are regarded as "sources." For time-varying fields, the electric and magnetic fields are coupled.

□ **<u>Example 4-4</u>** <u>(cf. Cheng 7-5)</u>

An AC voltage source with amplitude V_0 and angular frequency ω, given by $V_c = V_0 \sin(\omega t)$, is connected across a parallel-plate capacitor C, as shown in the figure.

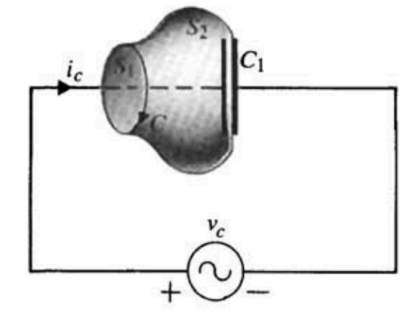

(a) Verify that the displacement current in the capacitor equals the conduction current in the wires.
(b) Determine the magnetic field intensity at a distance r from the wire.

Solution

(a)

1. $I_c = C\frac{dV_c}{dt} = \omega C V_0 \cos(\omega t)$
2. $E = \frac{V_c}{d}, D = \epsilon_0 E = \frac{\epsilon_0 V_0 \sin(\omega t)}{d}$
3. $\partial_t D = \frac{\omega \epsilon_0 V_0 \cos(\omega t)}{d}$
4. $I_d = \int \partial_t \vec{D} \cdot d\vec{s} = \omega \frac{\epsilon_0 A}{d} V_0 \cos(\omega t) = I_c$

(b)

Either surface S_1 or S_2 can be chose

$$H = \frac{I_c}{2\pi r} = \frac{I_d}{2\pi r} = \frac{\omega C V_0 \cos(\omega t)}{2\pi r}$$

4.2 Electromagnetic Matching Conditions

The matching conditions for time-varying fields are identical to those derived for static fields under the static assumption. Since the integration of the finite time varying fields over an infinitesimal area or volume is zero, the derivation follows the same procedure in both cases. We will directly present the final results:

$$\hat{n} \times \left(\vec{E}_1 - \vec{E}_2\right) = 0 \tag{4.2.1a}$$

$$\hat{n} \times \left(\vec{H}_1 - \vec{H}_2\right) = \vec{J}_s \tag{4.2.1b}$$

$$\hat{n} \cdot \left(\vec{D}_1 - \vec{D}_2\right) = \rho_s \tag{4.2.1c}$$

$$\hat{n} \cdot \left(\vec{B}_1 - \vec{B}_2\right) = 0 \tag{4.2.1d}$$

where $\hat{n}$ is the unit vector pointing from medium 2 to medium 1. The following are the general statements:

i. The tangential component of $\vec{E}$ is continuous across an interface.
ii. The tangential component of $\vec{H}$ is discontinuous at an interface with a surface current, as given by (4.2.1b).
iii. The normal component of $\vec{D}$ is discontinuous at an interface with a surface charge, as given by (4.2.1c).
iv. The normal component of $\vec{B}$ is continuous across an interface.

(4.2.1a-d) are general. Special cases: (a) For surface current $\vec{J}_s$ to exist, either medium 1 or 2 should be PEC ($\sigma \to \infty$), and inside PEC, the fields are zero. (b) When both media are lossless dielectrics ($\sigma = 0$), the sources term at the right-hand side of (4.2.1b-c) vanishes.

4.3 Potential Functions

To solve Maxwell equations for time-varying fields, we use a combination of the scalar potential from electrostatics and the vector potential from magnetostatics.
First, as in magnetostatics, we use the magnetic vector potential

$$\vec{B} = \vec{\nabla} \times \vec{A}$$
$$\vec{H} = \frac{1}{\mu}\vec{\nabla} \times \vec{A} \tag{4.3.1}$$

From (4.1.7a), where $\vec{E}$ can be expressed as

$$\vec{E} = -\partial_t \vec{A} - \vec{\nabla} V \tag{4.3.2}$$

Substituting (4.3.1) and (4.3.2) into (4.1.7b)

$$\vec{\nabla} \times \vec{\nabla} \times \vec{A} + \mu\epsilon\partial_t^2 \vec{A} + \mu\epsilon\partial_t \vec{\nabla} V = \mu \vec{J} \tag{4.3.3}$$

Use the identity $\vec{\nabla} \times \vec{\nabla} \times \vec{A} = \vec{\nabla}\left(\vec{\nabla} \cdot \vec{A}\right) - \nabla^2 \vec{A}$, we get

$$\nabla^2\vec{A} - \mu\epsilon\partial_t^2\vec{A} = -\mu\vec{J} + \vec{\nabla}\left(\vec{\nabla}\cdot\vec{A} + \mu\epsilon\partial_t V\right) \tag{4.3.4}$$

Note that only the curl of the magnetic vector potential is defined. According to Helmholtz's theorem, we have the freedom to specify its divergence:

$$\vec{\nabla}\cdot\vec{A} + \mu\epsilon\partial_t V = 0 \tag{4.3.5}$$

This is known as the Lorentz gauge. Then, we arrive at the inhomogeneous wave equation for the scalar potential V

$$\nabla^2 V - \mu\epsilon\partial_t^2 V = -\frac{\rho}{\epsilon} \tag{4.3.6}$$

and the vector potential $\vec{A}$

$$\nabla^2\vec{A} - \mu\epsilon\partial_t^2\vec{A} = -\mu\vec{J} \tag{4.3.7}$$

Now $\vec{A}$ and V are uncoupled. Given charge and current distributions, we first solve the inhomogeneous wave equations (4.3.6-7) to determine the potentials $\vec{A}$ and V. Once $\vec{A}$ and V are obtained, the electric and magnetic fields can be computed using (4.3.1-2) through differentiation.

4.4 Wave Equations

For source-free Maxwell equations, one can get the homogenous vector wave functions for both electric and magnetic field

$$\nabla^2\vec{E} - \mu\epsilon\partial_t^2\vec{E} = 0 \tag{4.4.1a}$$

$$\nabla^2\vec{H} - \mu\epsilon\partial_t^2\vec{H} = 0 \tag{4.4.1b}$$

Suppose we have a wave propagating in the x-direction, and the fields have no variations in y and z directions, then every Cartesian field component f in (4.4.1) is the solution of the one-dimensional homogeneous wave equation

$$\partial_x^2 f - \mu\epsilon\partial_t^2 f = 0 \tag{4.4.2}$$

and the solution takes the form of

$$f = f^{+}\left(t - \frac{x}{u}\right) + f^{-}\left(t + \frac{x}{u}\right) \tag{4.4.3}$$

where f^{+} denotes the wave propagating in the positive x-direction, and f^{-} denotes the wave propagating in the negative x-direction. $u = \frac{1}{\sqrt{\mu\epsilon}}$ is the velocity of the wave.

For inhomogeneous scalar wave equations (4.3.6), by comparing with the static case, the solution is (not proven here)

$$V(R,t) = \frac{1}{4\pi\epsilon}\int_{V}\frac{\rho\left(t - \frac{R}{u}\right)}{R}dv' \tag{4.4.4}$$

where R is the distance between the source point and the observation point. Equation (4.4.2) shows that the scalar potential at a distance R depends on the charge density at an earlier time $t - \frac{R}{u}$, accounting for the time delay in propagation. This is why $V(R,t)$ is called the retarded scalar potential. A function of $t + \frac{R}{u}$ would be unphysical, as it implies effects occurring before their cause.

Similarly, solving the inhomogeneous wave equation (4.3.7) for the vector potential $\vec{A}$ follows the same approach. The solution also yields retarded vector potential

$$\vec{A}\,(R,t) = \frac{\mu}{4\pi}\int_{V}\frac{\vec{J}\left(t - \frac{R}{u}\right)}{R}dv' \tag{4.4.5}$$

4.5 Time-Harmonic Fields

In many practical applications of electromagnetics, fields and sources vary sinusoidally with time. Such time-harmonic fields simplify the analysis of Maxwell equations by allowing solutions to be expressed in terms of complex exponentials. A time-harmonic field can be represented as

$$\vec{F}(\vec{r},t) = \Re\{\vec{F}(\vec{r})e^{i\omega t}\} \tag{4.5.1}$$

where $\vec{F}(\vec{r},t)$ is the real-valued time-domain field, $\vec{F}(\vec{r})$ is its complex-valued phasor, ω is the angular frequency, i is the imaginary unit, and $\Re$

denotes taking the real part. Note that the same notation is used for both time-domain fields and phasors; the context should clarify which representation is being used.

By substituting time-harmonic fields into Maxwell equations, time derivatives ∂_t are replaced by multiplication with $i\omega$, reducing the equations to algebraic forms in the frequency domain.

$$\vec{\nabla} \times \vec{E} = -i\omega\vec{B} \tag{4.5.2a}$$

$$\vec{\nabla} \times \vec{H} = i\omega\vec{D} + \vec{J} \tag{4.5.2b}$$

$$\vec{\nabla} \cdot \vec{D} = \rho \tag{4.5.2c}$$

$$\vec{\nabla} \cdot \vec{B} = 0 \tag{4.5.2d}$$

Note that when constitutive relations are used in (4.5.2b)

$$\vec{\nabla} \times \vec{H} = i\omega\epsilon\vec{E} + \sigma\vec{E} = i\omega\epsilon_c\vec{E} \tag{4.5.3}$$

where

$$\epsilon_c = \epsilon - i\frac{\sigma}{\omega} = \epsilon' - i\epsilon'' \tag{4.5.4}$$

is defined as the complex permeability, where ϵ' is the real part of ϵ_c, and ϵ'' is the negative imaginary part of ϵ_c. In general, ϵ can also be a complex number. The loss tangent of a material is defined as the negative ratio of the imaginary part to the real part of its complex permeability. For real ϵ, the loss tangent is expressed as

$$\tan\delta_c = \frac{\sigma}{\omega\epsilon} \tag{4.5.5}$$

If, $\sigma \gg \omega\epsilon$, the material is characterized as good conductors, If, $\sigma \ll \omega\epsilon$, the material is characterized as good insulators. It is noted that the comparison is relative to the frequency of interest.

The wave equation for the scalar potential V and its solution in frequency domain is

$$\nabla^2 V - k^2 V = -\frac{\rho}{\epsilon} \tag{4.5.5a}$$

$$V(R,t) = \frac{1}{4\pi\epsilon}\int_V \frac{\rho e^{-ikr}}{R} dv' \tag{4.5.5b}$$

where $k = \omega\sqrt{\mu\epsilon}$ is the wavenumber. The vector potential $\vec{A}$ and its solution in frequency domain is

$$\nabla^2\vec{A} + k^2\vec{A} = -\mu\vec{J} \tag{4.5.6a}$$

$$\vec{A}\,(R,t) = \frac{\mu}{4\pi}\int_V \frac{\vec{J}e^{-ikr}}{R} dv' \tag{4.5.6b}$$

4.6 Poynting's Theorem

From (4.1.7a-b) and the vector identity

$$\begin{aligned}\vec{\nabla}\cdot\left(\vec{E}\times\vec{H}\right) &= \vec{H}\cdot\left(\vec{\nabla}\times\vec{E}\right) - \vec{E}\cdot\left(\vec{\nabla}\times\vec{H}\right)\\ &= -\vec{H}\cdot\partial_t\vec{B} - \vec{E}\cdot\partial_t\vec{D} - \vec{E}\cdot\vec{J}\end{aligned} \tag{4.6.1}$$

In a simple medium (linear, homogeneous and isotropic):

$$\vec{H}\cdot\partial_t\vec{B} = \vec{H}\cdot\partial_t\mu\vec{H} = \partial_t\left(\frac{\mu}{2}\left|\vec{H}\right|^2\right)$$

$$\vec{E}\cdot\partial_t\vec{D} = \vec{E}\cdot\partial_t\epsilon\vec{E} = \partial_t\left(\frac{\epsilon}{2}\left|\vec{E}\right|^2\right)$$

$$\vec{E}\cdot\vec{J} = \sigma\left|\vec{E}\right|^2$$

(4.6.1) becomes

$$\vec{\nabla}\cdot\left(\vec{E}\times\vec{H}\right) = -\partial_t\left(\frac{\mu}{2}\left|\vec{H}\right|^2 + \frac{\epsilon}{2}\left|\vec{E}\right|^2\right) - \sigma\left|\vec{E}\right|^2 \tag{4.6.2}$$

Integrating (4.6.2) over a volume and apply divergence theorem

$$\oint_S (\vec{E} \times \vec{H}) \cdot d\vec{s} = -\partial_t \int_V \left(\frac{\mu}{2}|\vec{H}|^2 + \frac{\epsilon}{2}|\vec{E}|^2\right) dv - \int_V \sigma |\vec{E}|^2 \, dv \tag{4.6.3}$$

The first two terms on the right side of Eq. (8-82) represent the time rate of change of energy stored in the electric and magnetic fields, respectively, while the last term accounts for the ohmic power dissipation due to conduction currents in the presence of an electric field. Thus, Eq. (4.6.3) describes the rate of decrease in stored electromagnetic energy, minus the power lost as heat, which must equal the power flowing out of the volume through its surface. This leads to the definition of the Poynting vector

$$\vec{S} = \vec{E} \times \vec{H} \tag{4.6.4}$$

which represents the electromagnetic power flow per unit area. The surface integral of $\vec{S}$ over a closed surface gives the total power leaving the enclosed volume, a statement known as Poynting's theorem.

□ **Example 4-5** (cf. Cheng 8-7)

Determine the Poynting vector on the surface of a long, straight conducting wire with radius b and conductivity σ, carrying a direct current I. Verify Poynting's theorem.

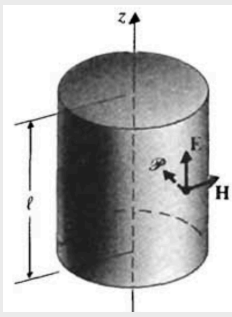

Solution

$$\vec{J} = \frac{I}{\pi b^2}\hat{z}$$

$$\vec{E} = \frac{\vec{J}}{\sigma} = \frac{I}{\sigma \pi b^2}\hat{z}$$

On the surface of the wire,

$$\vec{H} = \frac{I}{2\pi b}\hat{\phi}$$

Thus,

$$\vec{S} = \vec{E} \times \vec{H} = -\hat{r}\frac{I^2}{2\sigma\pi^2 b^3}$$

We integrate the Poynting vector over cylinder with a segment length l

$$-\oint_S \vec{S} \cdot d\,\vec{s} = \frac{I^2}{2\sigma\pi^2 b^3} 2\pi b l = I^2\left(\frac{l}{\sigma\pi b^2}\right) = I^2 R$$

which is equal to the Ohmic loss.

For time-harmonic cases, from (4.6.4)

$$\begin{aligned}\vec{S}(\vec{r},t) &= \Re\left[\vec{E}(\vec{r})e^{i\omega t}\right] \times \Re\left[\vec{H}(\vec{r})e^{i\omega t}\right] \\ &= \frac{\vec{E}(\vec{r})e^{i\omega t} + \vec{E}^*(\vec{r})e^{-i\omega t}}{2} \\ &\times \frac{\vec{H}(\vec{r})e^{i\omega t} + \vec{H}^*(\vec{r})e^{-i\omega t}}{2} \\ &= \frac{1}{2}\Re\left[\vec{E}(\vec{r}) \times \vec{H}^*(\vec{r}) + \vec{E}(\vec{r}) \times \vec{H}(\vec{r})e^{i2\omega t}\right]\end{aligned} \tag{4.6.5}$$

In most cases the time-average value is more important than the instantaneous value, the time-average Poynting vector can be obtained by integrating the instantneous Poynting vector over a period T and divided by T

$$\vec{S}_{av}(\vec{r},t) = \frac{1}{T}\int_0^T \vec{S}(\vec{r},t) = \frac{1}{2}\Re\left[\vec{E}(\vec{r}) \times \vec{H}^*(\vec{r})\right] \tag{4.6.6}$$

Since the term $\vec{E}(\vec{r}) \times \vec{H}^*(\vec{r})$ in (4.5.5) is constant over time and the average of $\vec{E}(\vec{r}) \times \vec{H}(\vec{r})e^{i2\omega t}$ is zero over a period.

□ **<u>Example 4-6</u>** <u>(cf. Cheng 8-8)</u>

The far field of a short current element $Idl\hat{z}$ located at the origin can be expressed as

$$\vec{E}(r,\theta) = i\left(\frac{60\pi I dl \sin\theta}{\lambda}\right)\frac{e^{-ikr}}{r}\hat{\theta}$$

$$\vec{H}(r,\theta) = i\left(\frac{Idl\sin\theta}{2\lambda}\right)\frac{e^{-ikr}}{r}\hat{\phi}$$

Find (a) the instantaneous Poynting vector and (b) the total average power radiate by the current element.

Solution

(a)

$$\begin{aligned}\vec{S}(r,\theta,t) &= \Re\left[\vec{E}(r,\theta)e^{i\omega t}\right] \times \Re\left[\vec{H}(r,\theta)e^{i\omega t}\right] \\ &= \hat{r}\, 30\pi\left(\frac{Idl\sin\theta}{r\lambda}\right)^2 \sin^2(\omega t - kr) \\ &= \hat{r}\, 30\pi\left(\frac{Idl\sin\theta}{r\lambda}\right)^2 [1 - 2\cos(\omega t - kr)\,]\end{aligned}$$

(b)

$$\vec{S}_{av}(r,\theta) = \frac{1}{2}\Re\left[\vec{E}(\vec{r}) \times \vec{H}^*(\vec{r})\right] = \hat{r}\, 15\pi\left(\frac{Idl\sin\theta}{r\lambda}\right)^2$$

Total average power:

$$\begin{aligned}P_{av} = \oint_S \vec{S}_{av}(r,\theta)\cdot d\vec{s} &= \int_0^{2\pi}\int_0^{\pi}\left[15\pi\left(\frac{Idl\sin\theta}{r\lambda}\right)^2\right] r^2\sin\theta\, d\theta d\phi \\ &= 40\left(\frac{Idl}{\lambda}\right)\end{aligned}$$