Chapter 6 Transmission Lines

Jake W. Liu

6.1 Fundamentals of Transmission Lines
6.1.1 Field Approach
6.1.2 Circuit Approach
6.2 Terminated Transmission Lines
6.3 Transients on Transmission Lines
6.4 The Smith Chart
6.5 Impedance Matching

6.1 Fundamentals of Transmission Lines

Transmission lines are two-conductor structures that guide TEM waves. We begin by analyzing a parallel plate structure with a TEM wave to derive the transmission line equation, then extend the analysis using a circuital approach to include loss terms. In this section, we assume the transmission line extends to infinity in z-direction, and the electromagnetic wave is propagating in $+z$-direction.

6.1.1 Field Approach

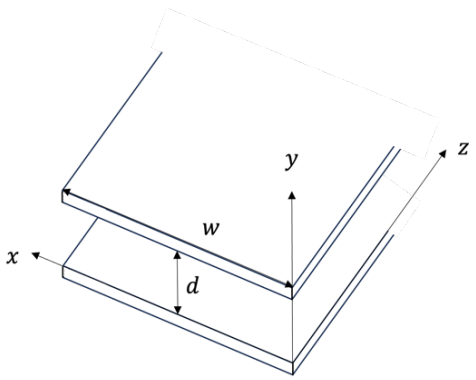

Fig. 6.1
Parallel-plate transmission line.

Consider a y-polarized electric TEM wave in the parallel plates propagating in $+z$-direction. The y-component of the electric field is expressed as

$$E_y = E_0^+ e^{-ikz} \tag{6.1.1}$$

where $k = \omega\sqrt{\mu\epsilon}$ is determined by the medium inside the parallel plates. From (5.1.1a) the x-component magnetic field can be expressed as

$$H_x = -\frac{E_0^+}{\eta} e^{-ikz} \tag{6.1.2}$$

where $\eta = \sqrt{\mu/\epsilon}$. The above equations follow the boundary condition for $E_t = 0$ and $H_n = 0$.
At the boundary $y = 0$, we have

$$\rho_s|_{y=0} = \hat{y} \cdot \vec{D} = \epsilon E_0^+ e^{-ikz} \tag{6.1.3a}$$

$$J_{sz}|_{y=0} = \left(\hat{y} \times \vec{H}\right)_z = \frac{E_0^+}{\eta} e^{-ikz} \tag{6.1.3b}$$

And at $y = d$, we have

$$\rho_s|_{y=d} = \hat{y} \cdot \vec{D} = -\epsilon E_0^+ e^{-ikz} \tag{6.1.4a}$$

$$J_{sz}|_{y=d} = \left(\hat{y} \times \vec{H}\right)_z = -\frac{E_0^+}{\eta} e^{-ikz} \tag{6.1.4b}$$

From the source-free Maxwell equations (5.1.1a) and (5.1.1b), we can write the following differential equations

$$\frac{dE_y}{dz} = i\omega\mu H_x \tag{6.1.5a}$$

$$\frac{dH_x}{dz} = i\omega\epsilon E_y \tag{6.1.5b}$$

Define the voltage between the plates $\mathcal{V}(z)$ and the total current on the upper plate $\mathcal{I}(z)$ as

$$\mathcal{V}(z) = -\int_0^d E_y dy = -E_y(z)d \tag{6.1.6a}$$

$$\mathcal{I}(z) = w\, J_{sz}|_{y=d} = H_x(z)w \tag{6.1.6b}$$

Integrating (6.1.5a) over y form 0 to d

$$-\frac{d\mathcal{V}(z)}{dz} = i\omega\mathcal{L}\mathcal{I}(z) \tag{6.1.7}$$

where

$$\mathcal{L} = \frac{\mu d}{w} \tag{6.1.8}$$

is the inductance per unit length. Similarly, integrating (6.1.5b), we get

$$-\frac{d\mathcal{I}(z)}{dz} = i\omega\mathcal{C}\mathcal{V}(z) \tag{6.1.9}$$

where

$$\mathcal{C} = \frac{\epsilon w}{d} \tag{6.1.10}$$

is the capacitance per unit length. From (6.1.7) and (6.1.9), we can get the second-order differential equations for $\mathcal{V}(z)$ and $\mathcal{I}(z)$

$$\frac{d\mathcal{V}^2(z)}{dz^2} = -\omega^2\mathcal{L}\mathcal{C}\mathcal{V}(z) \tag{6.1.11a}$$

$$\frac{d\mathcal{I}^2(z)}{dz^2} = -\omega^2\mathcal{L}\mathcal{C}\mathcal{I}(z) \tag{6.1.11b}$$

The solutions of (6.1.11) for propagation in +z-direction are

$$\mathcal{V}(z) = \mathcal{V}_0^+ e^{-ikz} \tag{6.1.12a}$$

$$\mathcal{I}(z) = \mathcal{I}_0^+ e^{-ikz} \tag{6.1.12b}$$

with

$$k = \omega\sqrt{\mathcal{L}\mathcal{C}} \tag{6.1.13}$$

and

$$\mathcal{V}_0^+ = -E_0^+ d \tag{6.1.14a}$$

$$\mathcal{I}_0^+ = \frac{E_0^+}{\eta} w \tag{6.1.14b}$$

By inserting the solutions (6.1.12) back to the coupled differential equations yields to relation

$$Z_0 = \frac{\mathcal{V}(z)}{\mathcal{I}(z)} = \frac{\mathcal{V}_0^+}{\mathcal{I}_0^+} = \sqrt{\frac{\mathcal{L}}{\mathcal{C}}} = \frac{\eta d}{w} \tag{6.1.15}$$

Z_0 is the called the characteristic impedance of the transmission line. The velocity of the propagation can be calculated by

$$v_p = \frac{\omega}{k} = \sqrt{\frac{1}{\mathcal{L}\mathcal{C}}} \tag{6.1.16}$$

The above analysis assumes a lossless transmission line. When the medium inside lossy with a conductivity σ or the parallel plates have a finite conductivity σ_c instead of being PEC, losses must be considered. From the relationship $\frac{\mathcal{C}}{\mathcal{G}} = \frac{\epsilon}{\sigma}$, we can find the loss due σ inside the parallel plate

$$\mathcal{G} = \frac{\mathcal{C}\sigma}{\epsilon} = \frac{\sigma w}{d} \tag{6.1.17}$$

The analysis of the loss due to σ_c is more complicated. In this case we assume that the plates are good conductors. Since the boundary condition $E_t = 0$ is not satisfied, we define the surface impedance as

$$Z_s = \frac{E_t}{J_s} = \frac{E_z}{H_x} = \eta_c \tag{6.1.18}$$

where J_s has been approximated to exist solely on the surface of the plates. Applying (5.1.27), we have

$$Z_s = (1+i)\sqrt{\frac{\pi\mu_c f}{\sigma_c}} \tag{6.1.19}$$

Then, the time average Poynting vector can be calculated by

$$\begin{aligned}\vec{S}_{av} = s_\sigma\,\hat{y} &= \frac{1}{2}\Re(E_z\,\hat{z}\times H_x^*\,\hat{x}) = \frac{\hat{y}}{2}\Re(Z_s|\,J_s|^2) \\ &= \frac{\hat{y}}{2}\sqrt{\frac{\pi\mu_c f}{\sigma_c}}|\,J_s|^2\end{aligned} \tag{6.1.20}$$

Using the relation $\mathcal{I} = w\,J_s$, the ohmic power dissipated in a unit length of the plate can be expressed as

$$P_\sigma = ws_\sigma = \frac{1}{2}\mathcal{I}^2\left(\frac{1}{w}\sqrt{\frac{\pi\mu_c f}{\sigma_c}}\right) = \frac{1}{2}\mathcal{I}^2\mathcal{R}_p \tag{6.1.21}$$

where $\mathcal{R}_p$ is the resistance per unit length for a single plate. For a parallel-plate transmission line we have an effective series of resistance

$$\mathcal{R} = 2\mathcal{R}_p = \frac{2}{w}\sqrt{\frac{\pi\mu_c f}{\sigma_c}} \tag{6.1.22}$$

In the analysis above, we used a field-based approach to relate the parameters $\mathcal{R}, \mathcal{L}, \mathcal{G}, \mathcal{C}$ to the geometry and structure of a parallel-plate transmission line. Alternatively, these parameters can be modeled as lumped elements, enabling a more straightforward derivation of the transmission line equations. Though approximate, the lumped-element model becomes exact in the limit of infinitesimally small segments.

6.1.2 Circuit Approach

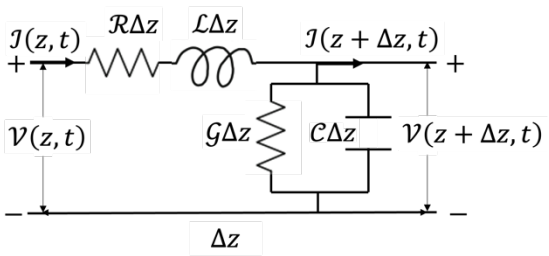

Fig. 6.2
Equivalent circuit of a differential length of the transmission line.

The analysis from previous subsection derives V, I in terms of $\mathcal{R}, \mathcal{L}, \mathcal{G}, \mathcal{C}$ from Maxwell equations. We consider a circuital approach to derive the general transmission line equation in this subsection. We take the analysis in time domain first.

From the above figure, applying the Kirchhoff's voltage law

$$\mathcal{V}(z,t) - \mathcal{R}\Delta z\mathcal{I}(z,t) - \mathcal{L}\Delta z\partial_t\mathcal{I}(z,t) = \mathcal{V}(z+\Delta z,t) \tag{6.1.23}$$

Rearranging the terms and let $\Delta z \to 0$, we get

$$-\partial_z\mathcal{V}(z,t) = \mathcal{R}\mathcal{I}(z,t) + \mathcal{L}\partial_t\mathcal{I}(z,t) \tag{6.1.24}$$

Similarly, applying the Kirchhoff's current law

$$\begin{aligned}\mathcal{I}(z,t) = \mathcal{I}(z+\Delta z,t) + \mathcal{G}\Delta z\mathcal{V}(z+\Delta z,t)\\ + \mathcal{C}\Delta z\partial_t\mathcal{V}(z+\Delta z,t)\end{aligned} \tag{6.1.25}$$

Same as above, rearranging the terms and let $\Delta z \to 0$, we get

$$-\partial_z\mathcal{I}(z,t) = \mathcal{G}\mathcal{V}(z,t) + \mathcal{C}\partial_t\mathcal{V}(z,t) \tag{6.1.26}$$

(6.1.24) and (6.1.26) are called the general transmission-line equations. Transform them to the phasor domain by

$$\mathcal{V}(z,t) = \Re\left[\mathcal{V}(z)e^{i\omega t}\right] \tag{6.1.27a}$$

$$\mathcal{I}(z,t) = \Re\left[\mathcal{I}(z)e^{i\omega t}\right] \tag{6.1.27b}$$

We get the time-harmonic transmission-line equations

$$-\frac{d\mathcal{V}(z)}{dz} = (\mathcal{R} + i\omega\mathcal{L})\,\mathcal{I}(z) \tag{6.1.28a}$$

$$-\frac{d\mathcal{I}(z)}{dz} = (\mathcal{G} + i\omega\mathcal{C})\mathcal{V}(z) \tag{6.1.28b}$$

The coupled equations can be combined to solve $\mathcal{V}, \mathcal{I}$ separately

$$\frac{d^2\mathcal{V}(z)}{dz^2} = \gamma^2\mathcal{V}(z) = -k^2\mathcal{V}(z) \tag{6.1.29a}$$

$$\frac{d^2\mathcal{I}(z)}{dz^2} = \gamma^2\mathcal{I}(z) \ = -k^2\mathcal{I}(z) \tag{6.1.29b}$$

where the propagation constant γ is

$$\gamma = \alpha + i\beta = \sqrt{(\mathcal{R} + i\omega\mathcal{L})(\mathcal{G} + i\omega\mathcal{C})} = ik \tag{6.1.30}$$

The solutions of (6.1.29) for propagation in +z-direction are the same as (6.1.12)

$$\mathcal{V}(z) = \mathcal{V}_0^+ e^{-ikz} = \mathcal{V}_0^+ e^{-\gamma z} \tag{6.1.31a}$$

$$\mathcal{I}(z) = \ \mathcal{I}_0^+ e^{-ikz} = \ \mathcal{I}_0^+ e^{-\gamma z} \tag{6.1.31b}$$

By inserting (6.1.31) back to (6.1.28), we can get the characteristic impedance Z_0

$$Z_0 = \frac{\mathcal{V}_0^+}{\mathcal{I}_0^+} = \frac{\mathcal{R} + i\omega\mathcal{L}}{\gamma} = \frac{\gamma}{\mathcal{G} + i\omega\mathcal{C}} = \sqrt{\frac{\mathcal{R} + i\omega\mathcal{L}}{\mathcal{G} + i\omega\mathcal{C}}} \tag{6.1.32}$$

Note that γ and Z_0 are intrinsic properties of a transmission line, regardless of its length. They depend on $\mathcal{R}, \mathcal{L}, \mathcal{G}, \mathcal{C}$ and ω, but not on the line's length. An infinite line simply means the absence of reflected waves. The above equations can be simplified as three cases:

i. Lossless line: $\mathcal{R} = \mathcal{G} = 0$. This is the same as the case anlyzed section 6.1.1 when losses are not considered.

ii. Low-loss line: $\mathcal{R} \ll \omega\mathcal{L}, \mathcal{G} \ll \omega\mathcal{C}$. These conditons are satisfied at very high frequency ranges.

iii. Distortionless line: $\mathcal{R}/\mathcal{L} = \mathcal{G}/\mathcal{C}$. In this case, $\beta = \omega\sqrt{\mathcal{L}\mathcal{C}}$ is a linear function of ω.

From (6.1.31) and (6.1.32), we can find the time-average power with the following expression

$$P(z) = \frac{1}{2}\Re[\mathcal{V}(z)\,\mathcal{I}^*(z)] = \frac{(\mathcal{V}_0^+)^2}{2|Z_0|^2}\Re(Z_0)e^{-2\alpha z} \tag{6.1.33}$$

The conservation of energy principle dictates that the rate of decrease of $P(z)$ along the transmission line must equal the time-averaged power loss per unit length P_L

$$-\partial_z P(z) = 2\alpha P(z) = P_L(z) = \frac{1}{2}(|\mathcal{I}(z)|^2\mathcal{R} + |\mathcal{V}(z)|^2\mathcal{G}) \tag{6.1.34}$$

Or, we can find the attenuation by the following

$$\alpha = \frac{P_L(z)}{2P(z)} \tag{6.1.35}$$

□ **<u>Example 6-1</u>** <u>(Cheng 9-2)</u>

Find the relation between the wave characteristics of a transmission line and the uniform plane wave solution in lossy medium.

Solution

From (6.1.5), but replacing ϵ, μ with complex values

$$\frac{dE_y}{dz} = i\omega\mu_c H_x$$
$$\frac{dH_x}{dz} = i\omega\epsilon_c E_y$$

where $\epsilon_c = \epsilon' - i\epsilon''$ and $\mu_c = \mu' - i\mu''$. We can write down the decoupled equations as

$$\frac{d^2E_y}{dz^2} = \gamma^2 E_y$$
$$\frac{d^2H_x}{dz^2} = \gamma^2 H_x$$

with

$$\gamma = \omega\sqrt{\mu_c \epsilon_c}$$

This is comparable with (6.1.30). The intrinsic impedance of the lossy medium is

$$\eta_c = \sqrt{\frac{\mu_c}{\epsilon_c}}$$

This is analogous with (6.1.32). Due to these analogies, many results derived for normal incidence of uniform plane waves can be applied to transmission-line problems, and vice versa.

6.2 Terminated Transmission Lines

When a transmission line has a finite length and is terminated, waves are reflected at discontinuities, generating propagating waves in the opposite direction. After multiple reflections, the problem can be simplified by representing the total voltage and current as the superposition of forward- and backward-propagating waves

$$\mathcal{V}(z) = \mathcal{V}^+(z) + \mathcal{V}^-(z) = \mathcal{V}_0^+ e^{-ikz} + \mathcal{V}_0^- e^{ikz} \tag{6.2.1a}$$

$$\mathcal{I}(z) = \mathcal{I}^+(z) + \mathcal{I}^-(z) = \frac{1}{Z_0}\left(\mathcal{V}_0^+ e^{-ikz} - \mathcal{V}_0^- e^{ikz}\right) \tag{6.2.1b}$$

The minus sign in (6.2.1b) appears when plugging the -*z*-propagating voltage solution into (6.1.28a). We can also express the forward- and backward-propagating voltage waves as

$$\mathcal{V}^+(z) = \mathcal{V}_0^+ e^{-ikz} = \frac{1}{2}[\mathcal{V}(z) + Z_0\mathcal{I}(z)] \tag{6.2.2a}$$

$$\mathcal{V}^-(z) = \mathcal{V}_0^- e^{ikz} = \frac{1}{2}[\mathcal{V}(z) - Z_0\mathcal{I}(z)] \tag{6.2.2b}$$

Let $z = z_2$ for (6.2.2) and find $\mathcal{V}_0^+, \mathcal{V}_0^-$, then plug them into (6.2.1) with $z = z_1$

$$\begin{aligned}\mathcal{V}(z_2) = \mathcal{V}^+(z_2) + \mathcal{V}^-(z_2) \\ &= \frac{e^{ik(z_1-z_2)}}{2}[\mathcal{V}(z_1) + Z_0\mathcal{I}(z_1)] \\ &+ \frac{e^{ik(z_2-z_1)}}{2}[\mathcal{V}(z_1) - Z_0\mathcal{I}(z_1)] \\ &= \cos[k(z_2 - z_1)]\,\mathcal{V}(z_1) \\ &- iZ_0 \sin[k(z_2 - z_1)]\,\mathcal{I}(z_1)\end{aligned} \tag{6.2.3a}$$

$$\begin{aligned}\mathcal{I}(z_2) = \mathcal{I}^+(z_2) + \mathcal{I}^-(z_2) \\ &= \frac{e^{ik(z_1-z_2)}}{2Z_0}[\mathcal{V}(z_1) + Z_0\mathcal{I}(z_1)] \\ &- \frac{e^{ik(z_2-z_1)}}{2Z_0}[\mathcal{V}(z_1) - Z_0\mathcal{I}(z_1)] \\ &= -i \sin[k(z_2 - z_1)]\,\mathcal{V}(z_1)/Z_0 \\ &+ \cos[k(z_2 - z_1)]\,\mathcal{I}(z_1)\end{aligned} \tag{6.2.3b}$$

Express (6.2.3) in a more compact way, we have the transformation relationship for the voltage/current pair

$$\begin{bmatrix}\mathcal{V}(z_2) \\ \mathcal{I}(z_2)\end{bmatrix} = \begin{bmatrix}\cos(k\delta z) & -iZ_0 \sin(k\delta z) \\ -i \sin(k\delta z)/Z_0 & \cos(k\delta z)\end{bmatrix}\begin{bmatrix}\mathcal{V}(z_1) \\ \mathcal{I}(z_1)\end{bmatrix} \tag{6.2.4}$$

where $\delta z = z_2 - z_1$.

We define the reflection coefficient and standing wave ratio at z as

$$\Gamma(z) \equiv \frac{\mathcal{V}^-(z)}{\mathcal{V}^+(z)} = \frac{\mathcal{V}_0^-}{\mathcal{V}_0^+} e^{i2kz} \tag{6.2.5}$$

By letting $z = z_1, z_2$, we can find the transformation of the reflection coefficient for different positions

$$\Gamma(z_2) = \Gamma(z_1)e^{i2k\delta z} \tag{6.2.6}$$

Note that the reflection coefficient has a fix amplitude of $|\Gamma(z)| = |\Gamma| = |\mathcal{V}_0^- / \mathcal{V}_0^+|$ and is periodic with $2k\delta z = 2n\pi$, or $\delta z = n\frac{\lambda}{2}$. We can define the standing wave ratio (SWR) as

$$S \equiv \left|\frac{\mathcal{V}_{max}}{\mathcal{V}_{min}}\right| = \left|\frac{\mathcal{V}^+(z)[1+\Gamma(z)]_{max}}{\mathcal{V}^+(z)[1+\Gamma(z)]_{min}}\right| = \frac{1+|\Gamma|}{1-|\Gamma|} \tag{6.2.7}$$

or,

$$|\Gamma| = \frac{S-1}{S+1} \tag{6.2.8}$$

Since the reflected wave amplitude is smaller or equal to the input wave amplitude, we have $|\Gamma| \leq 1$ and $S \geq 1$.

From (6.2.1), we can find the relation between the input impedance and the reflection coefficient at z

$$Z(z) \equiv \frac{\mathcal{V}(z)}{\mathcal{I}(z)} = Z_0 \frac{\mathcal{V}_0^+ e^{-ikz} + \mathcal{V}_0^- e^{ikz}}{\mathcal{V}_0^+ e^{-ikz} - \mathcal{V}_0^- e^{ikz}} = Z_0 \frac{1+\Gamma(z)}{1-\Gamma(z)} \tag{6.2.9}$$

or,

$$\Gamma(z) = \frac{Z(z) - Z_0}{Z(z) + Z_0} \tag{6.2.10}$$

Suppose the transmission line is terminated by an impedance Z_L we can obtain the reflection coefficient at the load position by (6.2.10)

$$\Gamma_L = \frac{Z_L - Z_0}{Z_L + Z_0} \tag{6.2.11}$$

Note that (6.2.11) is in analogous to (5.4.19a). For open circuit, we have $Z_L \to \infty$, and for short circuit, we have $Z_L \to 0$. In order to find the

transformation of the impedance for different positions, we combine (6.2.8-10)

$$
\begin{aligned}
Z(z_2) &= Z_0 \frac{1+\Gamma(z_2)}{1-\Gamma(z_2)} = Z_0 \frac{1+\Gamma(z_1)e^{i2k\delta z}}{1-\Gamma(z_1)e^{i2k\delta z}} \\
&= Z_0 \frac{1+\dfrac{Z(z_1)-Z_0}{Z(z_1)+Z_0}e^{i2k\delta z}}{1-\dfrac{Z(z_1)-Z_0}{Z(z_1)+Z_0}e^{i2k\delta z}} \\
&= Z_0 \frac{Z(z_1)\left(e^{ik\delta z}+e^{-ik\delta z}\right)-Z_0\left(e^{ik\delta z}-e^{-ik\delta z}\right)}{Z_0(e^{ik\delta z}+e^{-ik\delta z})-Z(z_1)(e^{ik\delta z}-e^{-ik\delta z})} \qquad (6.2.12) \\
&= Z_0 \frac{Z(z_1)\cos(k\delta z)-iZ_0\sin(k\delta z)}{Z_0\cos(k\delta z)-iZ(z_1)\sin(k\delta z)} \\
&= Z_0 \frac{Z(z_1)-iZ_0\tan(k\delta z)}{Z_0-iZ(z_1)\tan(k\delta z)}
\end{aligned}
$$

□ **<u>Example 6-2</u>** <u>(Cheng 9-9)</u>

A lossless 50 Ω transmission line is terminated with an unknown load impedance, resulting in a SWR of 3. The distance between successive voltage minima is 20 cm, with the first minimum occurring 5 cm from the load.

Determine:
(a) The reflection coefficient, Γ_L.
(b) The load impedance, Z_L.
(c) Find one solution such that the equivalent length and terminating resistance of a line where the input impedance matches Z_L.

Solution

(a)

$$\lambda = 0.2 \times 2 = 0.4$$

$$k = \frac{2\pi}{\lambda} = 5\pi$$

$$|\Gamma_L| = \frac{S-1}{S+1} = \frac{3-1}{3+1} = 0.5$$

From (6.2.10), and let z_1 be the position of first minimum

$$\Gamma_L = \Gamma(z_1)e^{i2k\delta z} = (-0.5)e^{i10\pi(0.05)} = -0.5i$$

(b)

$$Z(z) = Z_0\frac{1+\Gamma_L}{1-\Gamma_L} = 50\left(\frac{1-0.5i}{1+0.5i}\right) = 30 - i40$$

(c)

Replace Z_L with an extended length l_m and a terminated resistance R_m. From (6.2.12),

$$30 - i40 = 50\frac{R_m - i50\tan(-kl_m)}{50 - iR_m\tan(-kl_m)} = 50\frac{R_m + i50\tan(kl_m)}{50 + iR_m\tan(kl_m)}$$

Since the resistance is real, the distance l_m must follow

$$z'_m + l_m = \frac{n\lambda}{2}$$

or

$$z'_M + l_m = \frac{n\lambda}{2}$$

where z'_m and z'_M are the distances when the minimum/maximum reflection occur measured from Z_L. From the first minimum with $z'_m = 0.05$ and take $n = 1$, we have $l_m = 0.015$. Then

$$R_m = \frac{50}{3} = 16.7$$

6.3 Transients on Transmission Lines

To analyze transients on transmission lines, let us consider the following system with a switch. Note that the analysis here is conducted in time domain (all variables are real-valued).

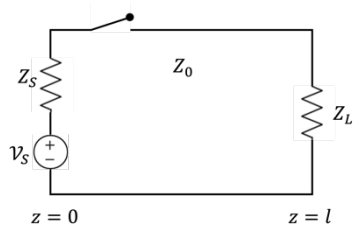

Fig. 6.3
A transmission line with a switch.

When the switch is closed at $t = 0$, according to Kirchhoff's voltage law, an incident wave is

$$\mathcal{V}^+ = \frac{Z_0}{Z_S + Z_0}\mathcal{V}_S = Z_0\mathcal{I}^+ \tag{6.3.1}$$

At $t = T = l/v$ the wave travels to the load end and generates a reflected wave

$$\mathcal{V}^- = \frac{Z_L - Z_0}{Z_L + Z_0}\mathcal{V}^+ = \Gamma_L\mathcal{V}^+ \tag{6.3.2}$$

At $t = 2T = 2l/v$ the reflected wave then travels to the source end and generates a secondary reflected wave

$$\mathcal{V}^{++} = \frac{Z_S - Z_0}{Z_S + Z_0}\mathcal{V}^- = \Gamma_S\mathcal{V}^- = \Gamma_S\Gamma_L\mathcal{V}^+ \tag{6.3.3}$$

This process continues, and can be represented by a bounce diagram consisting of a vertical time axis and horizontal spatial axis.

As $t \to \infty$, we reached the steady state

$$\begin{aligned}\mathcal{V}|_{t\to\infty} &= \mathcal{V}^+(1 + \Gamma_L + \Gamma_S\Gamma_L + \Gamma_S\Gamma_L^2 + \Gamma_S^2\Gamma_L^2 + \cdots) \\ &= \mathcal{V}^+(1 + \Gamma_S\Gamma_L + \Gamma_S^2\Gamma_L^2 + \cdots) \\ &+ \mathcal{V}^+(\Gamma_L + \Gamma_S\Gamma_L^2 + \Gamma_S^2\Gamma_L^3 + \cdots) \\ &= \frac{\mathcal{V}^+}{1 - \Gamma_S\Gamma_L} + \frac{\Gamma_L\mathcal{V}^+}{1 - \Gamma_S\Gamma_L} = \frac{Z_L}{Z_L + Z_S}\mathcal{V}_S\end{aligned} \tag{6.3.4}$$

The steady-state result is identical as analyzing the problem without the presence of transmission line.

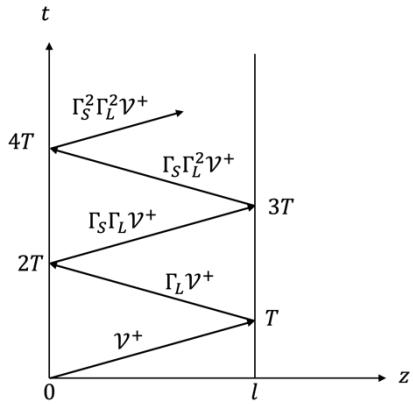

Fig. 6.4
Bouncing diagram for the transient transmission line

6.4 The Smith Chart

Simth chart is a tool to solve $\Gamma(z)$ and $Z(z)$ graphically. The construction of Simth chart involves representing the reflection coefficient and the normalized impedance into their real and imaginary parts

$$\Gamma = \Gamma_r + i\Gamma_i \tag{6.4.1a}$$

$$\bar{Z} = \frac{Z}{Z_0} = r + ix \tag{6.4.1b}$$

By rearranging the terms, we get

$$\left(\Gamma_r - \frac{r}{1+r}\right)^2 + \Gamma_i^2 = \left(\frac{1}{1+r}\right)^2 \tag{6.4.2a}$$

$$(\Gamma_r - 1)^2 + \left(\Gamma_i - \frac{1}{x}\right)^2 = \left(\frac{1}{x}\right)^2 \tag{6.4.2b}$$

(6.4.2a) represents a circle centered at $(\Gamma_r, \Gamma_i) = \left(\frac{r}{1+r}, 0\right)$ with a radius of $\frac{1}{1+r}$, and (6.4.2b) represents a circle centered at $(\Gamma_r, \Gamma_i) = \left(1, \frac{1}{x}\right)$ with a radius of $\frac{1}{|x|}$. The Γ_r-Γ_i plane composed with theses circles is called the Smith chart.

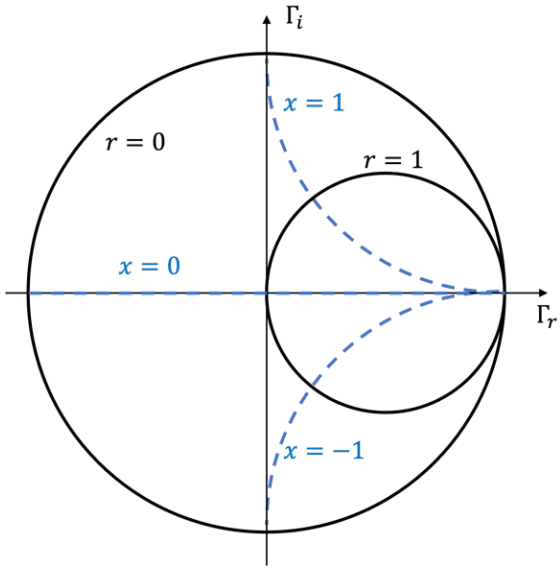

Fig. 6.5
Smith chart with several prominent circles.

Three characteristic points of the Smith chart are

i. $(\Gamma_r, \Gamma_i) = (-1, 0)$, or $(r, x) = (0, 0)$: short circuit
ii. $(\Gamma_r, \Gamma_i) = (1, 0)$, or $(r, x) = (\infty, \infty)$: open circuit
iii. $(\Gamma_r, \Gamma_i) = (0, 0)$, or $(r, x) = (1, 0)$: $Z = Z_0$

Note that the distance from the target point to the origin is equal to $|\Gamma|$, and varying z is equal to rotation around the origin. For positive δz (towards load) the rotation is counter-clockwise, and for negative δz (towards generator) the rotation is clockwise, with $\delta z = \pm\lambda/2$ completing 1 circle.

6.5 Impedance Matching

In transmission line systems, most of the goal we encountered is to maximize power reception at the load side. However, achieving this is not always straightforward. To accomplish this, an impedance matching network is inserted among the transmission line to match the input impedance to the characteristic impedance at a specific position.

A simple example of this is a quarter-wave transformer used to match a resistive load R_L to the characteristic impedance R_0. We insert a new transmission line segment with a characteristic impedance of R_0' and with its length equal to $\lambda/4$.

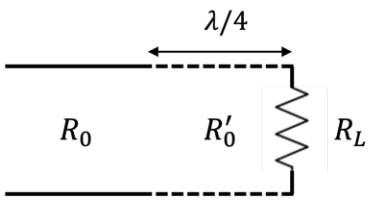

Fig. 6.6
Quarter-wave length transformer

According to (6.2.12), the input impedance seen from the entry of the new transmission line is

$$R_i = R_0' \frac{R_L \cos(-\pi/2) - iR_0' \sin(-\pi/2)}{R_0' \cos(-\pi/2) - iR_L \sin(-\pi/2)} = \frac{(R_0')^2}{R_L} \tag{6.5.1}$$

If we let $R_i = R_0$, we get

$$R_0' = \sqrt{R_L R_0} \tag{6.5.2}$$

This is the quarter-wave length transformer.

Another matching device is a single stub, either short-circuited or open-circuited at one end, which is shunted across the transmission line at a distance from the load.

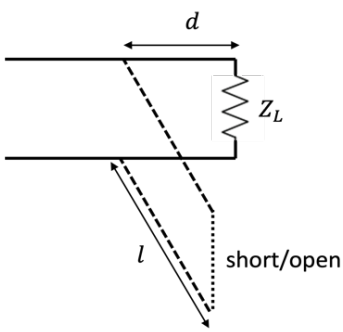

Fig. 6.7
Single-stub matching.

Assume all lines are with a characteristic impedance of Z_0. Since the stub and the load form a parallel circuit, it is better to use admittance rather than impedance in our analysis. For convenience, we derive the transformation of the admittance from (6.2.12)

$$
\begin{aligned}
Y(z_2) &= \frac{1}{Z_0 \dfrac{Z(z_1) - iZ_0 \tan(k\delta z)}{Z_0 - iZ(z_1)\tan(k\delta z)}} \\
&= Y_0 \frac{Z_0 - iZ(z_1)\tan(k\delta z)}{Z(z_1) - iZ_0 \tan(k\delta z)} \qquad (6.5.3) \\
&= Y_0 \frac{Y(z_1) - iY_0 \tan(k\delta z)}{Y_0 - iY(z_1)\tan(k\delta z)}
\end{aligned}
$$

which has the same form as (6.5.3). Thus, for a short-circuited stub ($Y_L \to \infty$), we have the admittance of

$$Y_{stub} = Y_0 \frac{1}{-i\tan(-kl)} = -iY_0 \cot(kl) \qquad (6.5.4)$$

And for an open-circuited stub ($Y_L \to 0$), we have the admittance of

$$Y_{stub} = -Y_0 i \tan(-kl) = iY_0 \tan(kl) \qquad (6.5.5)$$

The parameter d is selected so that the input admittance looking towards Z_L at the distance d is $Y_L' = Y_0 + iB$. The parameter l is then selected to cancel out the imaginary part of Y_L', that is, $Y_{stub} = -iB$. Then, the admittance at the entry will be $Y_L' + Y_{stub} = Y_0$.
To represent the normalized admittance from normalized impedance on the Smith chart, we consider the following relation

$$\bar{Y} = \frac{1}{\bar{Z}} = g + ib \qquad (6.5.5)$$

Comparing (6.5.5) with (6.5.1), one can see that the normalized admittance $\bar{Y}$ is the transformation of the normalized impedance $\bar{Z}$ with a quarter

wave-line with a unity characteristic impedance. Thus, the point of $\bar{Z}$ and $\bar{Y}$ are diametrically opposite to each other on the $|\Gamma|$-circle.

□ **Example 6-3** (Cheng 9-20)

A 50 Ω transmission line is connected to a load impedance $Z_L = 35 - i47.5\ \Omega$. Determine the position and length of a short-circuited stub needed for impedance matching. Shorter length is prefered.

Solution

We use Smith chart to solve this.

$$\bar{Z} = \frac{(35 - i47.5)}{50} = 0.7 - i0.95$$

By finding the diametrical counterpart, we get to $\bar{Y}$.

In order to let the $Y' = Y_0 + iB$ ($\bar{Y}' = 1 + ib$), we draw the unit circle with $g = 1$, which intersects with the constant $|\Gamma|$-circle at $\bar{Y}'$.

Reading the distance values (towards generator), we get

$$d = (0.618 - 0.109)\lambda = 0.059\lambda$$

Read from the chart, we get

$$\bar{Y}' = 1 + i1.2$$

From (6.5.4):

$$-1.2 = -\cot(kl)$$

Thus,

$$l = 0.111\lambda$$

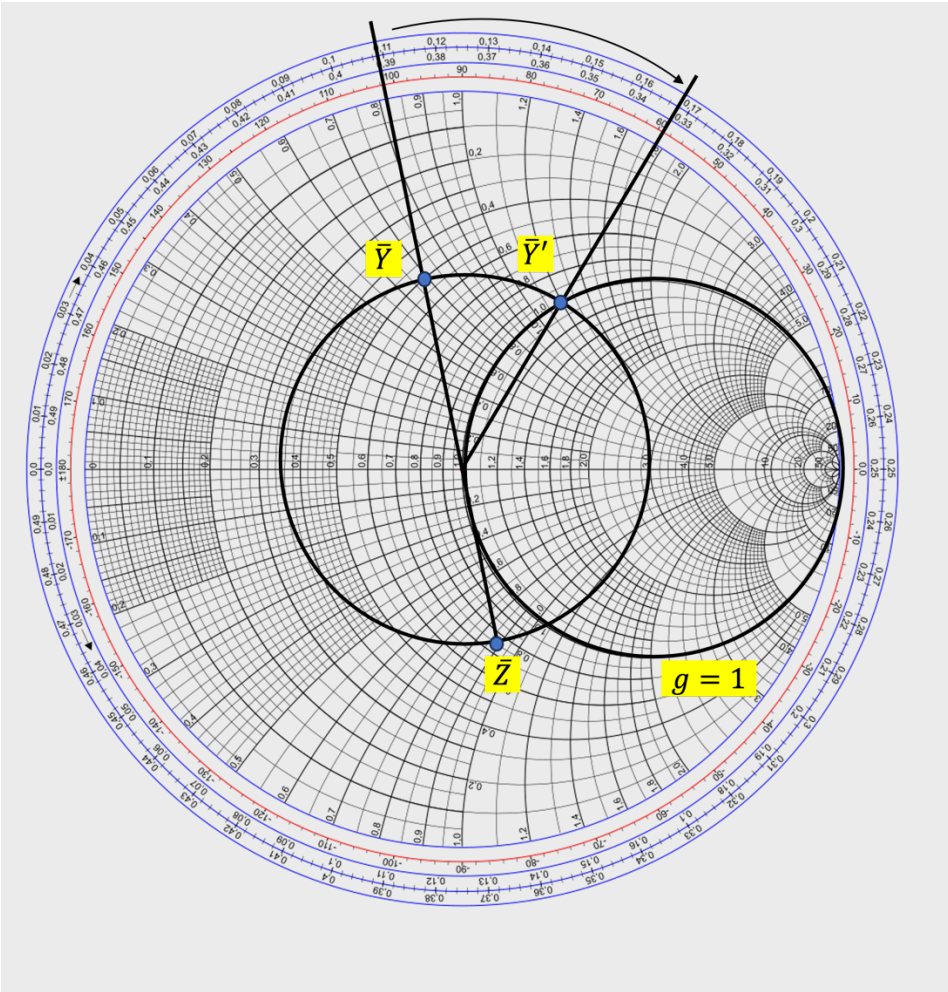
$\bar{Y}$
$\bar{Y}'$
$\bar{Z}$
$g = 1$