Chapter 7 Waveguides and Cavities

Jake W. Liu

7.1 Fundamentals of Waveguides
7.2 Rectangular Waveguides
    7.2.1 TM Modes
    7.2.2 TE Modes
7.3 Rectangular Cavities

7.1 Fundamentals of Waveguides

Waveguides are transmission structures that can guide electromagnetic waves with higher order modes other than TEM waves. Suppose the waveguide is extended in z-direction, general method to solve the z-components of the fields, then solve the transverse fields accordingly. Assume the electric field has the form

$$\vec{E}(x,y,z) = \vec{E}_0(x,y)e^{-\gamma z} = \vec{E}_0(x,y)Z(z) \tag{7.1.1}$$

The electric field also satisfies the homogeneous vector Helmholtz equation $(\nabla^2 + k^2)\vec{E} = 0$ with $k = \omega\sqrt{\mu\epsilon}$. Plug (7.1.1) into this and divide the Laplacian operator into the longitudinal part and the transverse part, we get

$$\begin{aligned}\left(\nabla_{xy}^2 + \nabla_z^2 + k^2\right)\vec{E} &= \left(\nabla_{xy}^2 + \partial_z^2 + k^2\right)\vec{E} \\ &= \nabla_{xy}^2\vec{E} + (\gamma^2 + k^2)\vec{E} = 0\end{aligned} \tag{7.1.2}$$

The above analysis also applies to the magnetic field. From the set of Maxwell equations $\vec{\nabla} \times \vec{E} = -i\omega\mu\vec{H}$, $\vec{\nabla} \times \vec{H} = i\omega\epsilon\vec{E}$ and $\partial_z \to -\gamma$, we can write

$$\left(\vec{\nabla} \times \vec{E}\right)_x = \partial_y E_z + \gamma E_y = -i\omega\mu H_x \tag{7.1.3a}$$

$$\left(\vec{\nabla} \times \vec{E}\right)_y = -\partial_x E_z - \gamma E_x = -i\omega\mu H_y \tag{7.1.3b}$$

$$\left(\vec{\nabla} \times \vec{H}\right)_x = \partial_y H_z + \gamma H_y = i\omega\epsilon E_x \tag{7.1.3c}$$

$$\left(\vec{\nabla} \times \vec{H}\right)_y = -\partial_x H_z - \gamma H_x = i\omega\epsilon H_y \tag{7.1.3d}$$

For example, let us take (7.1.3c) $\times\, i\omega\mu$ +(7.1.3b) $\times\, \gamma$, we can express E_x in terms of E_z and H_z. By similar manipulations and drop the $e^{-\gamma z}$ term in derivation, we arrive at the component-wise relationship of the fields $\vec{E}_0, \vec{H}_0$

$$E_x^0 = -\frac{1}{h^2}\left(\gamma\partial_x E_z^0 + i\omega\mu\partial_y H_z^0\right) \tag{7.1.4a}$$

$$E_y^0 = -\frac{1}{h^2}\left(\gamma\partial_y E_z^0 - i\omega\mu\partial_x H_z^0\right) \tag{7.1.4b}$$

$$H_x^0 = -\frac{1}{h^2}\left(\gamma\partial_x H_z^0 - i\omega\epsilon\partial_y E_z^0\right) \tag{7.1.4c}$$

$$H_y^0 = -\frac{1}{h^2}\left(\gamma\partial_y H_z^0 + i\omega\epsilon\partial_x E_z^0\right) \tag{7.1.4d}$$

where

$$h^2 = \gamma^2 + k^2 \tag{7.1.5}$$

Thus, one can solve (7.1.3) for the longitudinal components E_z^0, H_z^0 first subjected to the required boundary conditions, then solve the transverse components $E_x^0, E_y^0, H_x^0, H_y^0$ using (7.1.4).

When solving (7.1.3) under the boundary conditions of a given waveguide, we find that solutions exist only for specific discrete values of h. These discrete values are known as the eigenvalues of the boundary-value problem. Each eigenvalue defines the characteristic properties of a particular mode of the waveguide. Define

$$h = \omega_c\sqrt{\mu\epsilon} \tag{7.1.6}$$

we can get

$$\gamma = \sqrt{h^2 - \omega^2\mu\epsilon} = h\sqrt{1 - \left(\frac{\omega}{\omega_c}\right)^2} = h\sqrt{1 - \left(\frac{f}{f_c}\right)^2} \tag{7.1.7}$$

where

$$f_c = \frac{\omega_c}{2\pi} = \frac{h}{2\pi\sqrt{\mu\epsilon}} \tag{7.1.8}$$

is called the cut-off frequency. Note that (7.1.7) can propagate only when γ has imaginary part, that is $1 - \left(\frac{f}{f_c}\right)^2 < 1$. Thus, only when $f > f_c$ does the wave propagate. We can say that waveguide works as a high-pass filter.

Assume $k \in \mathbb{R}$ (no loss with the medium inside the waveguide), from (7.1.5) we get

$$\begin{aligned}\gamma &= \sqrt{h^2 - k^2} \\ &= \begin{cases} h\sqrt{1 - \left(\frac{k}{h}\right)^2} = h\sqrt{1 - \left(\frac{f}{f_c}\right)^2} = \alpha & f < f_c \\ ik\sqrt{1 - \left(\frac{h}{k}\right)^2} = ik\sqrt{1 - \left(\frac{f_c}{f}\right)^2} = i\beta, & f > f_c \end{cases}\end{aligned} \tag{7.1.9}$$

with

$$\alpha = h\sqrt{1 - \left(\frac{f}{f_c}\right)^2} \tag{7.1.10a}$$

$$\beta = k\sqrt{1 - \left(\frac{f_c}{f}\right)^2} \tag{7.1.10b}$$

being the attenuation constant of the evanescent mode and phase constant of the propagation mode.

When $f > f_c$, the corresponding wavelength is then calculated by

$$\lambda_g = \frac{2\pi}{\beta} = \frac{\lambda}{\sqrt{1-(f_c/f)^2}} > \lambda \tag{7.1.11}$$

where

$$\lambda = \frac{2\pi}{k} = \frac{v}{f} \tag{7.1.12}$$

is the wavelength of a plane wave solution in an unbounded region with the same material as in the waveguide. Now let us calculate the phase velocity

$$v_p = \frac{\omega}{\beta} = \frac{v}{\sqrt{1-(f_c/f)^2}} > v \tag{7.1.13}$$

and the group velocity

$$\begin{aligned} v_g = \frac{d\omega}{d\beta} = \frac{1}{d\beta/d\omega} &= \frac{1}{d\left[(f/v)\sqrt{1-(f_c/f)^2}\right]/df} \\ &= \frac{v}{d\sqrt{f^2-f_c^2}/df} = \frac{v}{f/\sqrt{f^2-f_c^2}} \\ &= v\sqrt{1-(f_c/f)^2} < v \end{aligned} \tag{7.1.14}$$

From (7.1.13), we see that the phase velocity is always higher than that in the unbounded medium and is also frequency-dependent, meaning that the waveguide is dispersive. The relation between the group velocity and phase velocity is given by

$$v_g v_p = v^2 \tag{7.1.15}$$

In order to analyze waveguide problems, we can characterize the solution of (7.1.4) into three categories:

i. TEM waves: $E_z = H_z = 0$.
ii. Transverse magnetic (TM) waves: $E_z \neq 0, H_z = 0$.
iii. Transverse electric (TE) waves: $E_z = 0, H_z \neq 0$.

In the first case, where $h = 0$, the system reduces to a parallel-plate transmission line, as discussed in Chapter 6. From (7.1.8), it can be shown that $f_c = 0$, indicating that TEM waves have no cutoff frequency. In this section, we will examine TM and TE waves in detail.

A. TM waves

The TM-wave problem first involves solving

$$\nabla_{xy}^2 E_z^0 + h^2 E_z^0 = 0 \tag{7.1.16}$$

with appropriate boundary conditions. Since $H_z = 0$, (7.1.4) reduces to

$$E_x^0 = -\frac{1}{h^2}\gamma\partial_x E_z^0 \tag{7.1.17a}$$

$$E_y^0 = -\frac{1}{h^2}\gamma\partial_y E_z^0 \tag{7.1.17b}$$

$$H_x^0 = \frac{1}{h^2} i\omega\epsilon\partial_y E_z^0 \tag{7.1.17c}$$

$$H_y^0 = -\frac{1}{h^2} i\omega\epsilon\partial_x E_z^0 \tag{7.1.17d}$$

Using (7.1.17), the wave impedance can be found by

$$Z_{TM} = \frac{E_x^0}{H_y^0} = -\frac{E_y^0}{H_x^0} = \frac{\gamma}{i\omega\epsilon} = \begin{cases} -i\dfrac{h}{\omega\epsilon}\sqrt{1-\left(\dfrac{f}{f_c}\right)^2}, & f < f_c \\ \eta\sqrt{1-\left(\dfrac{f_c}{f}\right)^2}, & f > f_c \end{cases} \tag{7.1.18}$$

and the following is satisfied

$$\vec{H} = \frac{1}{Z_{TM}}\left(\hat{z} \times \vec{E}\right) \tag{7.1.19}$$

B. TE waves

The analysis of TE waves is similar. The TE-wave problem first involves solving

$$\nabla_{xy}^2 H_z^0 + h^2 H_z^0 = 0 \tag{7.1.20}$$

with appropriate boundary conditions. Since $E_z = 0$, (7.1.4) reduces to

$$E_x^0 = -\frac{1}{h^2} i\omega\mu\partial_y H_z^0 \tag{7.1.21a}$$

$$E_y^0 = \frac{1}{h^2} i\omega\mu\partial_x H_z^0 \tag{7.1.21b}$$

$$H_x^0 = -\frac{1}{h^2}\gamma\partial_x H_z^0 \tag{7.1.21c}$$

$$H_y^0 = -\frac{1}{h^2}\gamma\partial_y H_z^0 \tag{7.1.21d}$$

Using (7.1.21), the wave impedance can be found by

$$Z_{TE} = \frac{E_x^0}{H_y^0} = -\frac{E_y^0}{H_x^0} = \frac{i\omega\mu}{\gamma} = \begin{cases} i\dfrac{\omega\mu}{h\sqrt{1-(f/f_c)^2}}, & f < f_c \\ \dfrac{\eta}{\sqrt{1-(f_c/f)^2}}, & f > f_c \end{cases} \tag{7.1.22}$$

and the following is satisfied

$$\vec{E} = Z_{TE}\left(\vec{H} \times \hat{z}\right) \tag{7.1.23}$$

□ **<u>Example 7-1</u>** <u>(Cheng 10-1)</u>

(a) Calculate the wave impedance and guide wavelength for TM and TE modes at a frequency twice the cutoff frequency of a waveguide.
(b) Repeat the calculations for a frequency equal to half the cutoff frequency.

Solution

(a)

$$Z_{TM} = \eta\sqrt{1-\left(\frac{f_c}{f}\right)^2} = \eta\sqrt{1-\left(\frac{1}{2}\right)^2} = 0.866\eta$$

$$Z_{TE} = \frac{\eta}{\sqrt{1-(f_c/f)^2}} = 1.155\eta$$

$$\lambda_{TE} = \lambda_{TM} = \frac{\lambda}{\sqrt{1-(f_c/f)^2}} = 1.155\lambda$$

(b)

$$Z_{TM} = -i\frac{h}{\omega\epsilon}\sqrt{1-\left(\frac{f}{f_c}\right)^2} = -i\frac{0.276h}{f_c\epsilon}$$

$$Z_{TE} = i\frac{\omega\mu}{h\sqrt{1-(f/f_c)^2}} = i\frac{3.63f_c\mu}{h}$$

7.2 Rectangular Waveguides

Metallic rectangular waveguides are fundamental components for transmitting electromagnetic waves in high-frequency applications. They support the propagation of both TM and TE waves. In our analysis, we assume the boundaries of the metallic waveguide are PEC.

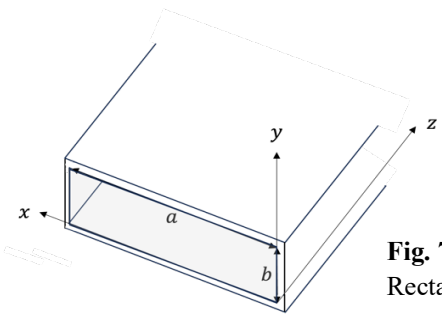

Fig. 7.1
Rectangular waveguide structure

7.2.1 TM Modes

From (7.1.16), we have

$$\left(\partial_x^2 + \partial_y^2 + h^2\right)E_z^0(x,y) = 0 \tag{7.2.1}$$

By separation of variables, let

$$E_z^0(x,y) = X(x)Y(y) \tag{7.2.2}$$

Substituting (7.2.2) into (7.2.1), we get

$$\frac{1}{X(x)}\frac{d^2X(x)}{dx^2} + \frac{1}{Y(x)}\frac{d^2Y(y)}{dy^2} = -h^2 \tag{7.2.3}$$

Let

$$\begin{cases} \dfrac{1}{X(x)}\dfrac{d^2X(x)}{dx^2} = -k_x^2 \\ \dfrac{1}{Y(x)}\dfrac{d^2Y(y)}{dy^2} = -k_y^2 \end{cases} \tag{7.2.4}$$

with

$$k_x^2 + k_y^2 = h^2 \tag{7.2.5}$$

The solution takes the form of

$$\begin{cases} X(x) = Ae^{ik_x x} + Be^{-ik_x x} \\ Y(y) = Ce^{ik_y y} + De^{-ik_y y} \end{cases} \tag{7.2.6}$$

Now, let us we apply the boundary conditions

$$E_z^0(0,y) = 0 \tag{7.2.7a}$$

$$E_z^0(a,y) = 0 \tag{7.2.7b}$$

$$E_z^0(x,0) = 0 \tag{7.2.7c}$$

$$E_z^0(x,b) = 0 \tag{7.2.7d}$$

we have

$$B = -A \tag{7.2.8a}$$

$$2iA\sin(k_x a) = 0 \tag{7.2.8b}$$

$$C = -D \tag{7.2.8c}$$

$$2iC\sin\left(k_y b\right) = 0 \tag{7.2.8d}$$

From (7.2.8b) and (7.2.8d) we can get see that the values of k_x and k_y are restricted by

$$\begin{cases} k_x = \dfrac{m\pi}{a}, & m \in \mathbb{N} \\ k_y = \dfrac{n\pi}{b}, & n \in \mathbb{N} \end{cases} \tag{7.2.9}$$

We can express the final solution as

$$E_z^0 = E_0 \sin\left(\frac{m\pi}{a}x\right)\sin\left(\frac{n\pi}{b}y\right) \tag{7.2.10}$$

Note that for E_z^0 to have non-zero solution, both m and n cannot be zero. Thus, the minimum choice for (m, n) is $(1, 1)$, hence we say $\mathrm{TM}_{mn} = \mathrm{TM}_{11}$ is the fundamental mode.

Other fields can be obtained by (7.1.17) accordingly:

$$E_x^0 = -\frac{\gamma}{h^2}\left(\frac{m\pi}{a}\right)E_0\cos\left(\frac{m\pi}{a}x\right)\sin\left(\frac{n\pi}{b}y\right) \tag{7.2.11a}$$

$$E_y^0 = -\frac{\gamma}{h^2}\left(\frac{n\pi}{b}\right)E_0\sin\left(\frac{m\pi}{a}x\right)\cos\left(\frac{n\pi}{b}y\right) \tag{7.2.11b}$$

$$H_x^0 = \frac{i\omega\epsilon}{h^2}\left(\frac{n\pi}{b}\right)E_0\sin\left(\frac{m\pi}{a}x\right)\cos\left(\frac{n\pi}{b}y\right) \tag{7.2.11c}$$

$$H_y^0 = -\frac{i\omega\epsilon}{h^2}\left(\frac{m\pi}{a}\right)E_0\cos\left(\frac{m\pi}{a}x\right)\sin\left(\frac{n\pi}{b}y\right) \tag{7.2.11d}$$

From (7.2.5), we have

$$h = \sqrt{\left(\frac{m\pi}{a}\right)^2 + \left(\frac{n\pi}{b}\right)^2} = \omega_{c,mn}\sqrt{\mu\epsilon} \tag{7.2.12}$$

Thus, the cut-off frequency is

$$f_{c,mn} = \frac{1}{2\pi\sqrt{\mu\epsilon}}\sqrt{\left(\frac{m\pi}{a}\right)^2 + \left(\frac{n\pi}{b}\right)^2} \tag{7.2.13}$$

From (7.1.9), we can get the propagation constant in z-direction

$$\gamma = \sqrt{h^2 - k^2} = i\sqrt{k^2 - \left(\frac{m\pi}{a}\right)^2 - \left(\frac{n\pi}{b}\right)^2} \tag{7.2.13}$$

It is obvious that in order to have a propagating wave, we need $k > \sqrt{\left(\frac{m\pi}{a}\right)^2 + \left(\frac{n\pi}{b}\right)^2}$.

7.2.2 TE Modes

Similar to TM mode analysis, from (7.1.20), we have

$$\left(\partial_x^2 + \partial_y^2 + h^2\right)H_z^0(x,y) = 0 \tag{7.2.14}$$

The derivation here is also similar to TM case. We can express it as

$$H_z^0 = X(x)Y(y) \tag{7.2.15}$$

with

$$\begin{cases} X(x) = Ae^{ik_x x} + Be^{-ik_x x} \\ Y(y) = Ce^{ik_y y} + De^{-ik_y y} \end{cases} \tag{7.2.16}$$

Now, let us we apply the boundary conditions

$$E_y(0,y) = 0 \rightarrow \partial_x H_z^0|_{(0,y)} = 0 \tag{7.2.17a}$$

$$E_y(a,y) = 0 \rightarrow \partial_x H_z^0|_{(a,y)} = 0 \tag{7.2.17b}$$

$$E_x(x,0) = 0 \rightarrow \partial_y H_z^0|_{(x,0)} = 0 \tag{7.2.17c}$$

$$E_x(x,b) = 0 \rightarrow \partial_y H_z^0|_{(x,b)} = 0 \tag{7.2.17d}$$

we have

$$B = A \tag{7.2.18a}$$

$$-2k_x A \sin(k_x a) = 0 \tag{7.2.18b}$$

$$C = D \tag{7.2.18c}$$

$$2k_y C \sin(k_y b) = 0 \tag{7.2.18d}$$

From (7.2.18b) and (7.2.18d) we can get see that the values of k_x and k_y have the same restriction as in (7.2.9). We can express the final solution as

$$H_z^0 = H_0 \cos\left(\frac{m\pi}{a}x\right)\cos\left(\frac{n\pi}{b}y\right) \tag{7.2.19}$$

Other fields can be obtained by (7.1.21) accordingly:

$$E_x^0 = \frac{i\omega\mu}{h^2}\left(\frac{n\pi}{b}\right)H_0 \cos\left(\frac{m\pi}{a}x\right)\sin\left(\frac{n\pi}{b}y\right) \tag{7.2.20a}$$

$$E_y^0 = -\frac{i\omega\mu}{h^2}\left(\frac{m\pi}{a}\right)H_0 \sin\left(\frac{m\pi}{a}x\right)\cos\left(\frac{n\pi}{b}y\right) \tag{7.2.20b}$$

$$H_x^0 = \frac{\gamma}{h^2}\left(\frac{m\pi}{a}\right)H_0 \sin\left(\frac{m\pi}{a}x\right)\cos\left(\frac{n\pi}{b}y\right) \tag{7.2.20c}$$

$$H_y^0 = \frac{\gamma}{h^2}\left(\frac{n\pi}{b}\right)H_0 \cos\left(\frac{m\pi}{a}x\right)\sin\left(\frac{n\pi}{b}y\right) \tag{7.2.20d}$$

Note that the general expression for cut-off frequency is the same as (7.2.13). However, for (7.2.20) to have nonzero solutions, m and n cannot both be zero simultaneously. This differs from the TM case. Thus, if $a > b$, we have the fundamental mode of $\mathrm{TE}_{mn} = \mathrm{TE}_{10}$, which has the lowest cutoff frequency of

$$f_{c,10} = \frac{1}{2a\sqrt{\mu\epsilon}} \tag{7.2.21}$$

□ **Example 7-2** (Cheng 10-9)

WG-16, designed for X-band applications, has dimensions a = 2.29 cm and b = 1.02 cm. To ensure operation exclusively in the dominant TE_{10} mode, the operating frequency must be at least 25% above the TE_{10} cutoff frequency but not exceed 95% of the next higher cutoff frequency. Determine the allowable operating frequency range based on these constraints.

Solution

$$f_{c,10} = \frac{1}{2a\sqrt{\mu\epsilon}} = \frac{3 \times 10^8}{2 \times 2.29 \times 10^{-2}} = 6.55 \text{ GHz}$$

$$f_{c,20} = \frac{1}{a\sqrt{\mu\epsilon}} = 13.1 \text{ GHz}$$

The allowable frequency is

$$1.25 f_{c,10} \leq f \leq 0.95 f_{c,20}$$

$$8.19 \text{ GHz} \leq f \leq 12.45 \text{ GHz}$$

7.3 Rectangular Cavities

Consider in the z-direction the rectangular waveguide is closed at both ends with $z = 0$ and $z = d$. The analysis of a rectangular cavity is similar to the rectangular waveguide. The difference is that the propagation factor $e^{-\gamma z}$ in (7.1.1) is replaced by a standing wave solution with an additional term restricting the solution to discrete cases. It can be deduced from previous analysis and the method of separation of variables that in the z-direction, the solution has the type of

$$Z(z) = A \sin\left(\frac{p\pi}{d} z\right) + B \cos\left(\frac{p\pi}{d} z\right), \qquad p \in \mathbb{N} \tag{7.3.1}$$

Thus, we use the triple mnp to denote modes in a cavity. From $\vec{\nabla} \cdot \vec{E} = 0 \rightarrow \vec{\nabla}_{xy} \cdot \vec{E}_{xy} = -\partial_z E_z$, and since $\vec{E}_{xy}$ are zero on both $z = 0$ and $z = d$, we have the boundary condition $\partial_z E_z|_{z=0,\ z=d}$. Hence, for the TM_{mnp} mode, we have

$$E_z = E_0 \sin\left(\frac{m\pi}{a}x\right) \sin\left(\frac{n\pi}{b}y\right) \cos\left(\frac{p\pi}{d}z\right) \tag{7.3.2}$$

For the TE_{mnp} mode, the boundary condition is $H_z|_{z=0,\ z=d}$, hence we have

$$H_z = H_0 \cos\left(\frac{m\pi}{a}x\right) \cos\left(\frac{n\pi}{b}y\right) \sin\left(\frac{p\pi}{d}z\right) \tag{7.3.3}$$

Other field components can be computed by (7.1.17) and (7.1.21) accordingly, with γ replaced by $\frac{p\pi}{d}$ and $Z(z)$ selected (either $\sin\left(\frac{p\pi}{d}z\right)$ or $\cos\left(\frac{p\pi}{d}z\right)$) to satisfy the boundary conditions. Notice that we are not allow to use (7.1.1), since, for example, the components of $\vec{E}$ does not always have the same dependency on z due to boundary conditions. The corresponding is calculated by cut-off frequency is

$$f_{c,mnp} = \frac{1}{2\pi\sqrt{\mu\epsilon}} \sqrt{\left(\frac{m\pi}{a}\right)^2 + \left(\frac{n\pi}{b}\right)^2 + \left(\frac{p\pi}{d}\right)^2} \tag{7.3.4}$$

In ideal cases, an electromagnetic wave can be stored inside a cavity without loss. However, in practical scenarios, energy within the cavity gradually dissipates over time mostly due to the finite conductivity of the walls. We often use the quality factor to characterize a cavity, which has the definition of

$$Q = 2\pi \frac{W}{E_T} = 2\pi \frac{W}{P_L T} = 2\pi \frac{W}{P_L/f} = \frac{\omega W}{P_L} \tag{7.3.5}$$

where W is the total time-average energy stored in the cavity, E_T is the energy dissipated in one period at the specific frequency, P_L is the time-average power dissipated in the cavity, and T is the period of one cycle.