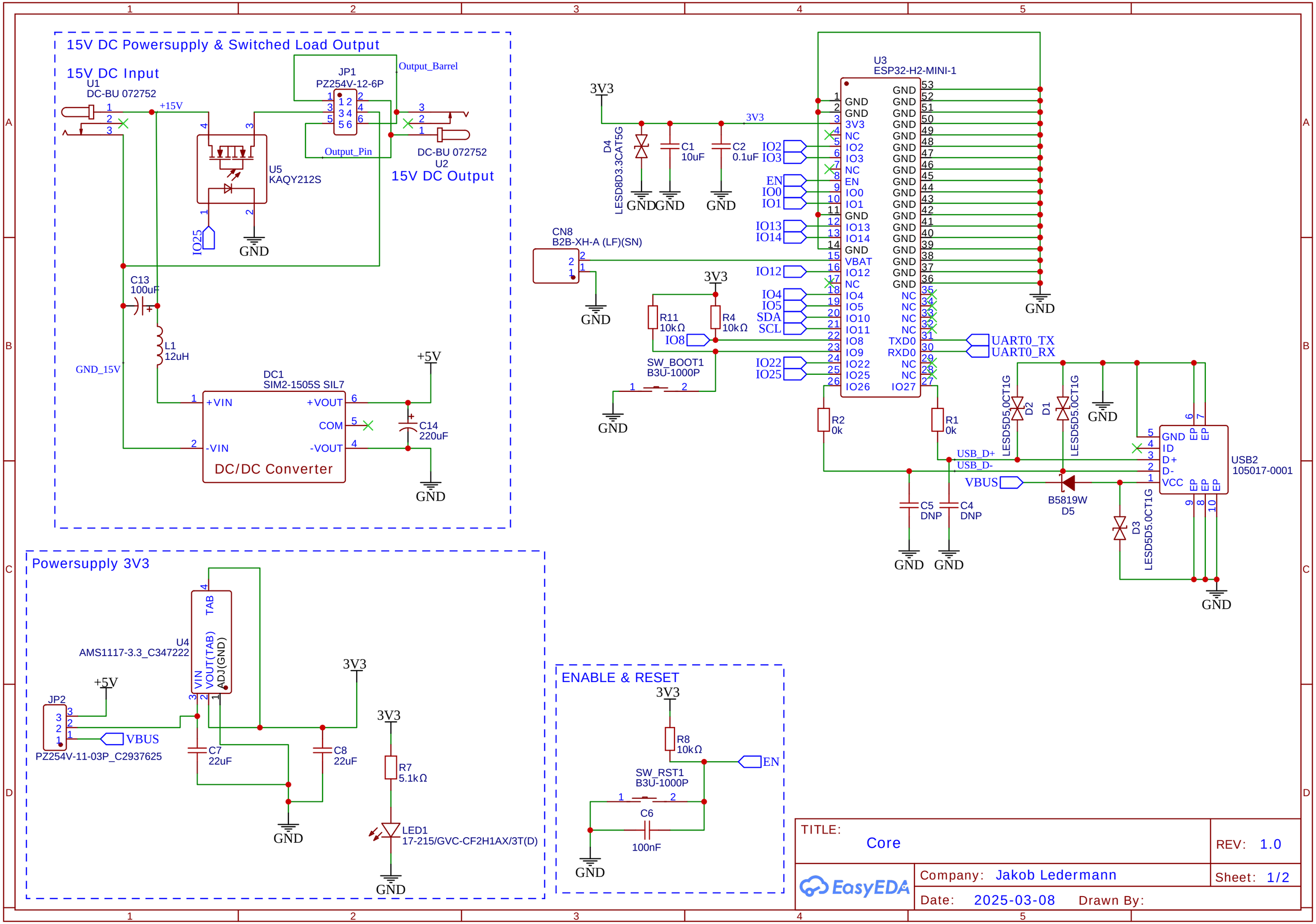

TITLE: Core	REV: 1.0
Company: Jakob Ledermann	Sheet: 1/2
Date: 2025-03-08 Drawn By:	

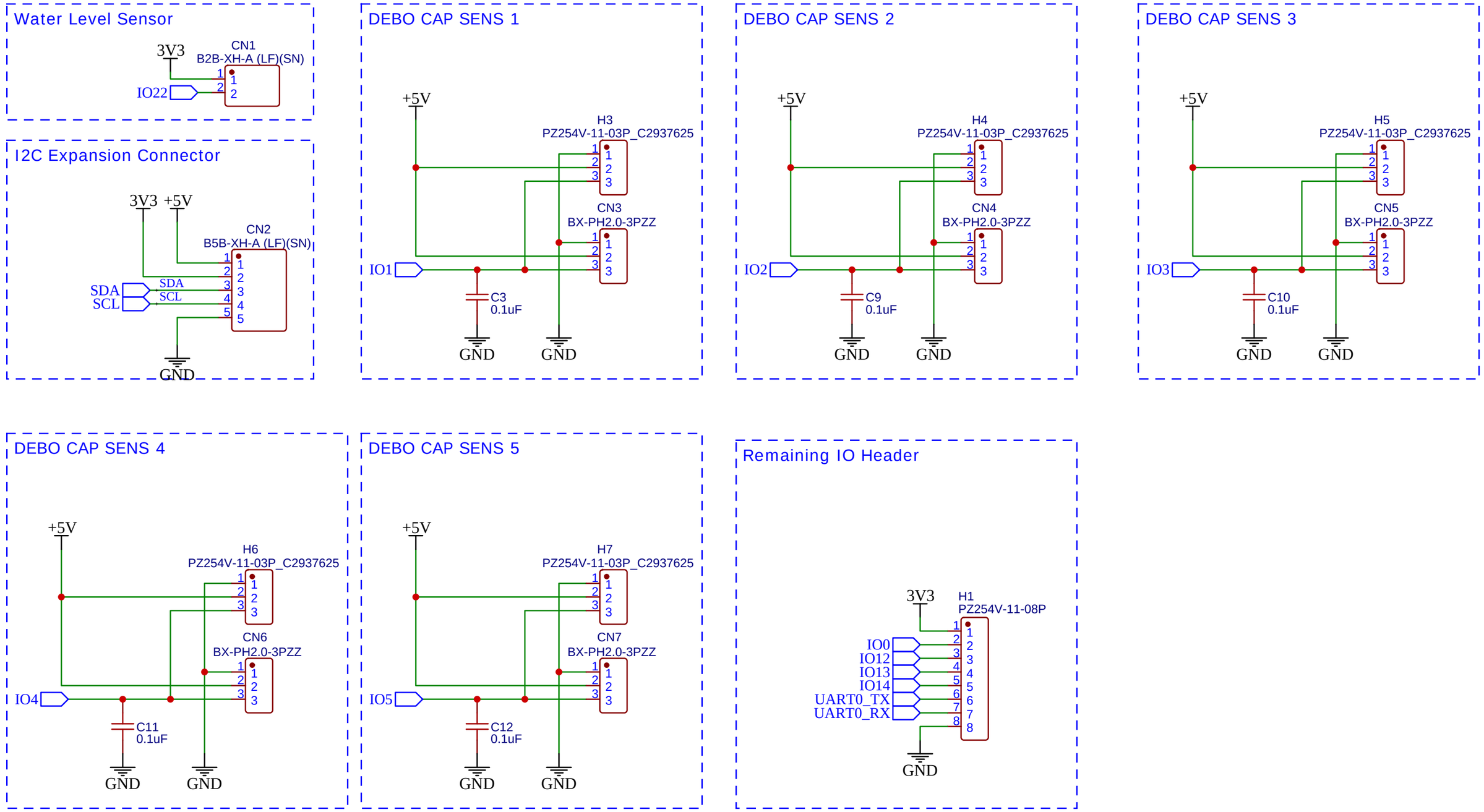

TITLE: Sensors	REV: 1.0
EasyEDA — Company: Jakob Ledermann	Sheet: 2/2
Date: 2025-03-08 Drawn By:	