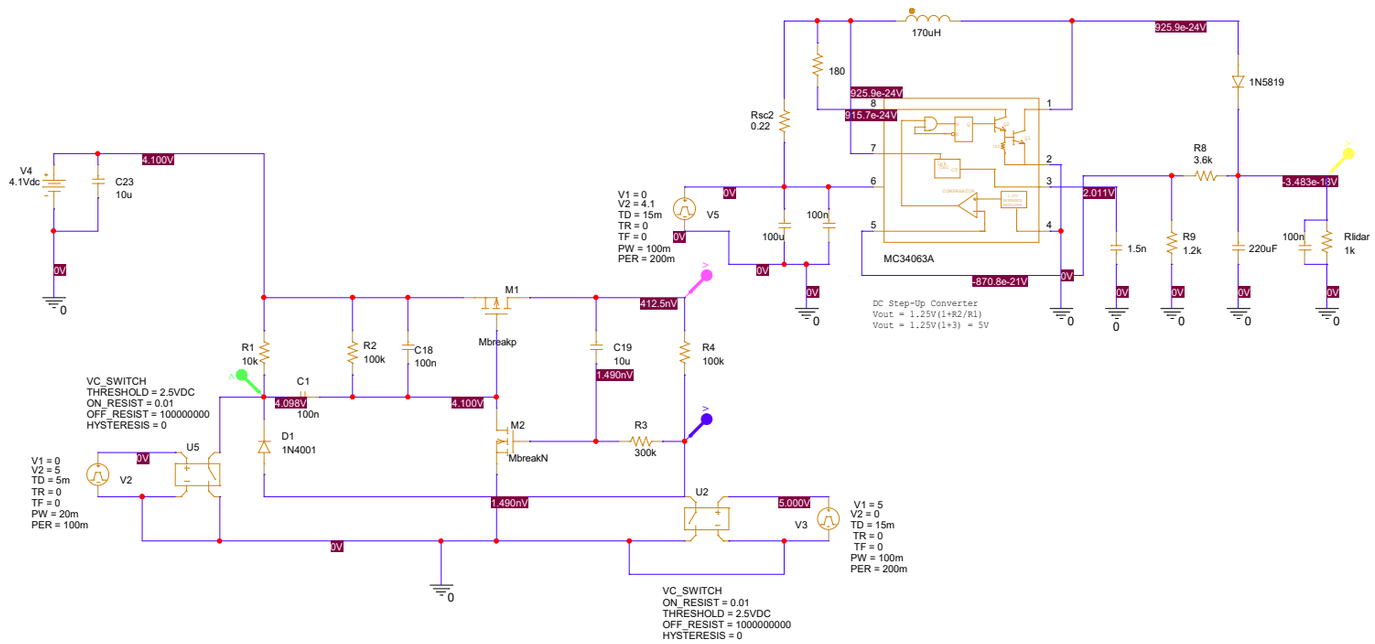

Title	WCSA - PSPICE Testing	
Size B	Document Number 2 - Power Block Simulation	Rev 0.2
Date: Thursday, April 07, 2022	Sheet 1 of 1	