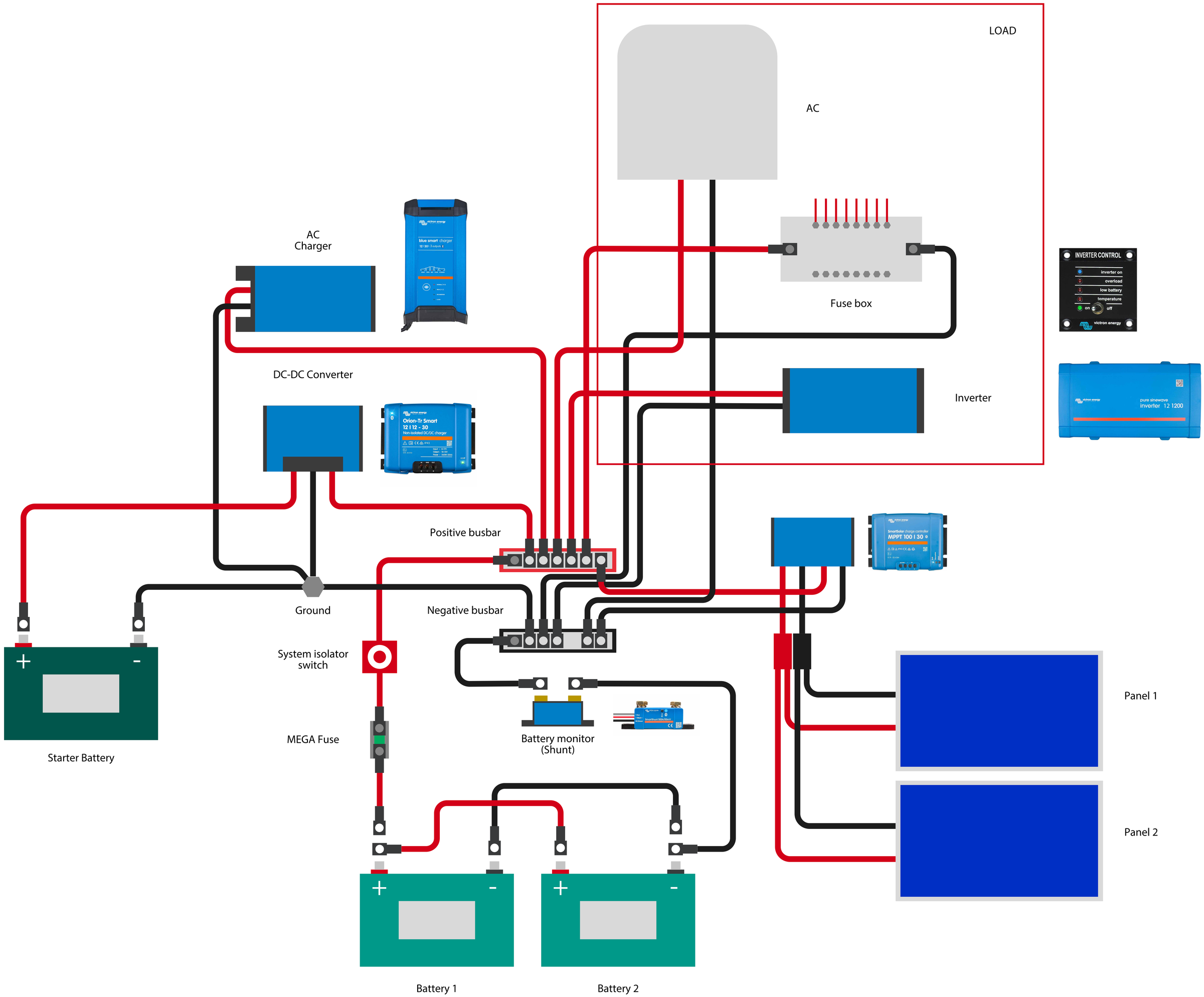
LOAD
AC
Fuse box
Inverter
INVERTER CONTROL
inverter on
overload
low battery
temperature
on
off
victron energy
pure sinewave
inverter 12 1200
AC
Charger
blue smart charger
DC-DC Converter
Orion-Tr Smart
12 | 12 - 30
Non-isolated DC/DC charger
SmartSolar charge controller
MPPT 100 | 30
Positive busbar
Ground
Negative busbar
System isolator
switch
MEGA Fuse
Battery monitor
(Shunt)
Starter Battery
Panel 1
Panel 2
Battery 1
Battery 2

Yoshios

10:37 August 23, 2025

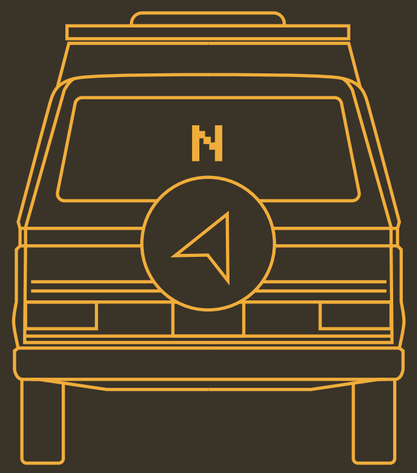

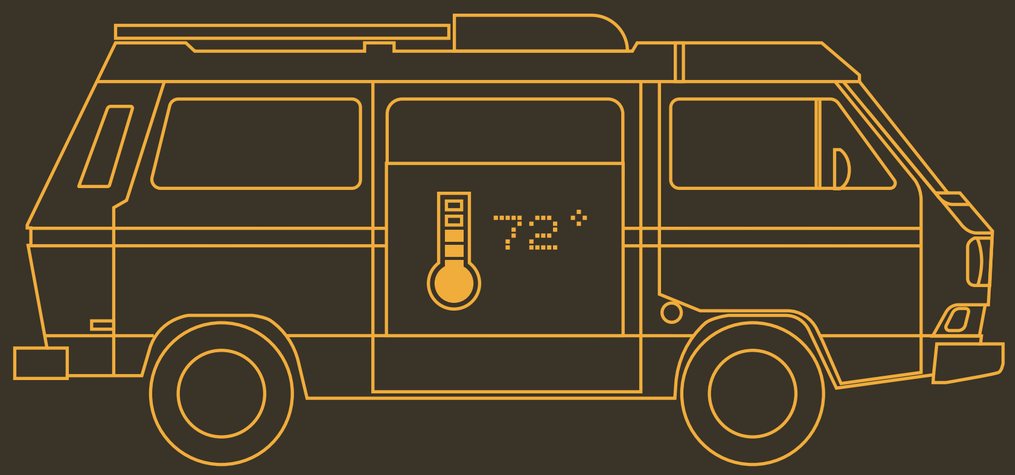

6.9°
Roll

46%
3.21

-4.2°
Pitch

102°
54%

75% 86%

Charge
23 / 34 ah

Solar
240 w

Load
-144 w

Remaining
12.2 hr

Spiral
The Vernon Spring

28

0:32/ 2:45

YoshiOS

10:37 August 23, 2025

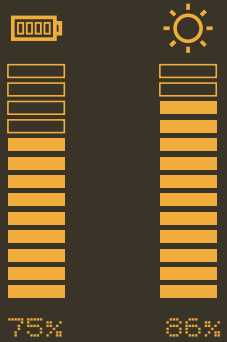

Charge
23 / 34 ah

Line / Load
240 w / -144w

48%
3.21

102°
54%

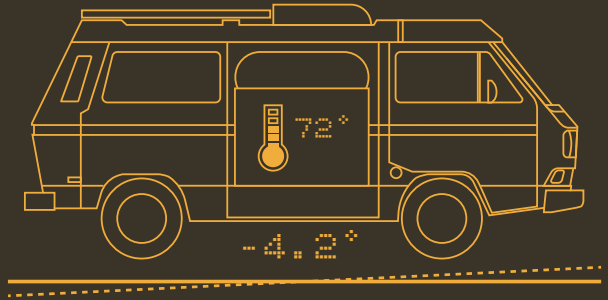

Audio Source
Spotify

Artist: Spiral
Track: The Vernon Spring

0:32/ 2:45

28