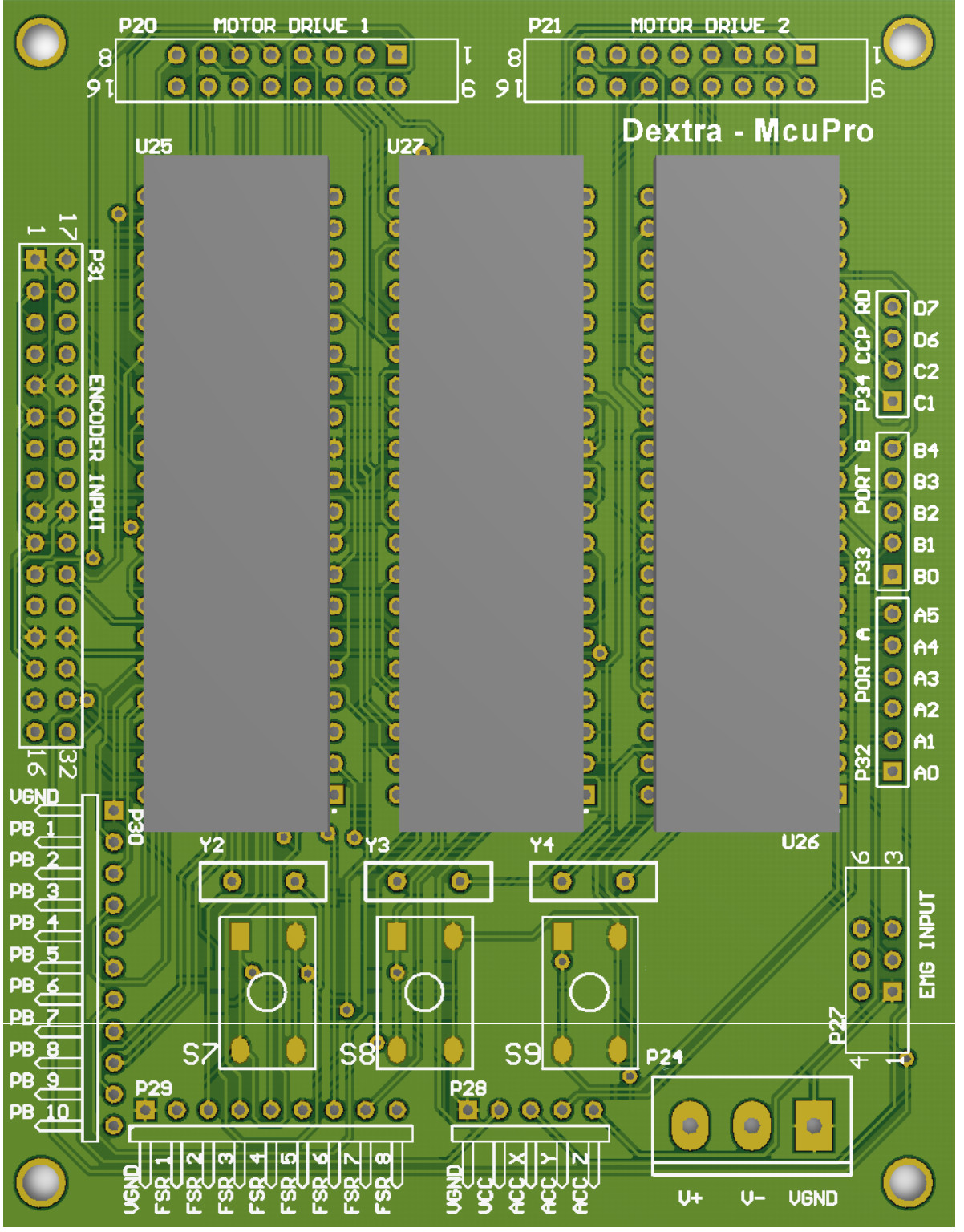
P20
MOTOR DRIVE 1
P21
MOTOR DRIVE 2
Dextra - McuPro
U25
U27
U26
P31
ENCODER INPUT
P30
P32
PORT A
A5
A4
A3
A2
A1
A0
P33
PORT B
B4
B3
B2
B1
B0
P34
CCP
RD
D7
D6
C2
C1
VGND
PB 1
PB 2
PB 3
PB 4
PB 5
PB 6
PB 7
PB 8
PB 9
PB 10
Y2
Y3
Y4
S7
S8
S9
P29
P28
P24
P27
EMG INPUT
VGND
FSR 1
FSR 2
FSR 3
FSR 4
FSR 5
FSR 6
FSR 7
FSR 8
VGND
VCC
ACC X
ACC Y
ACC Z
V+
V-
VGND

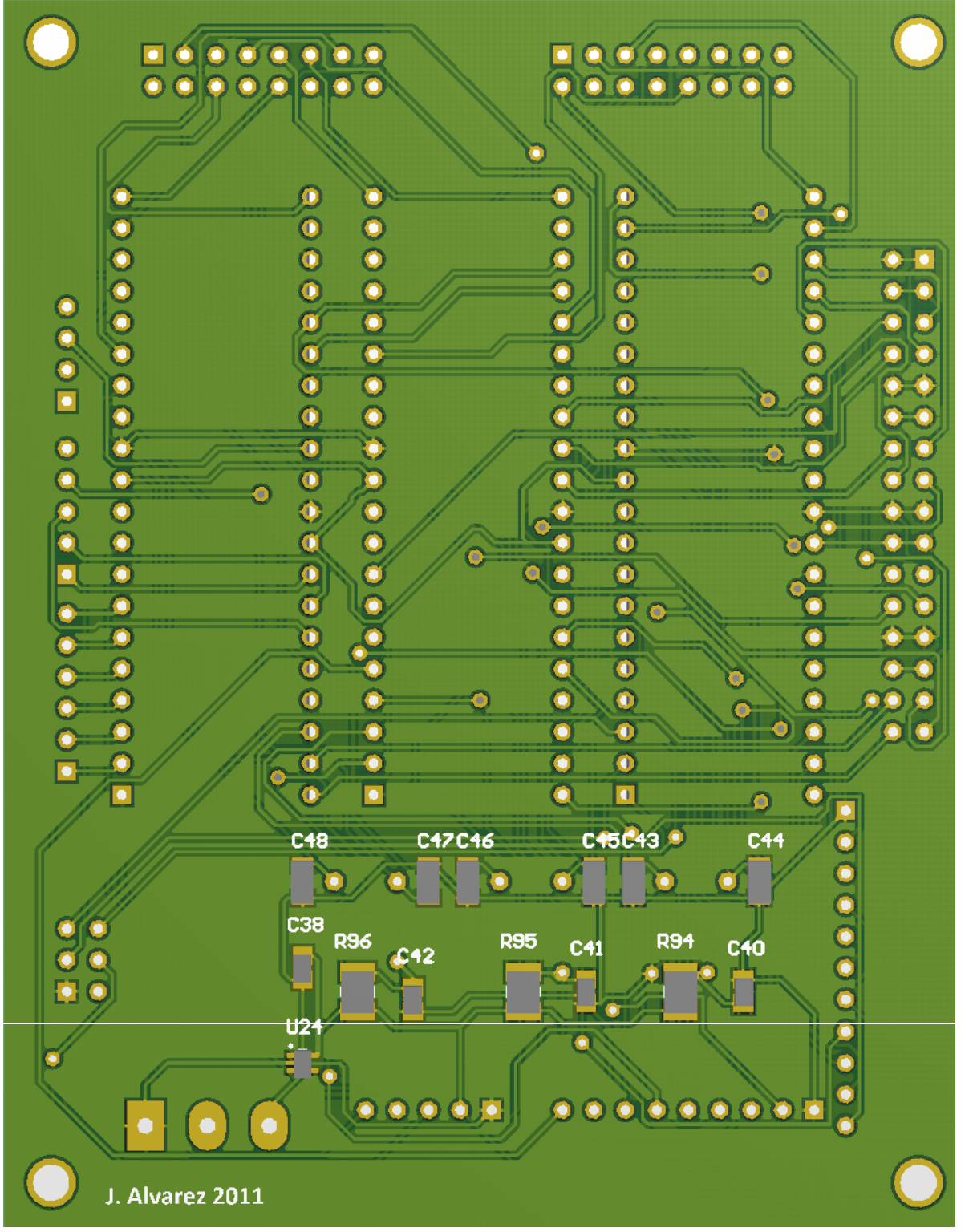
C48
C47
C46
C45
C43
C44
C38
R96
C42
R95
C41
R94
C40
U24
J. Alvarez 2011

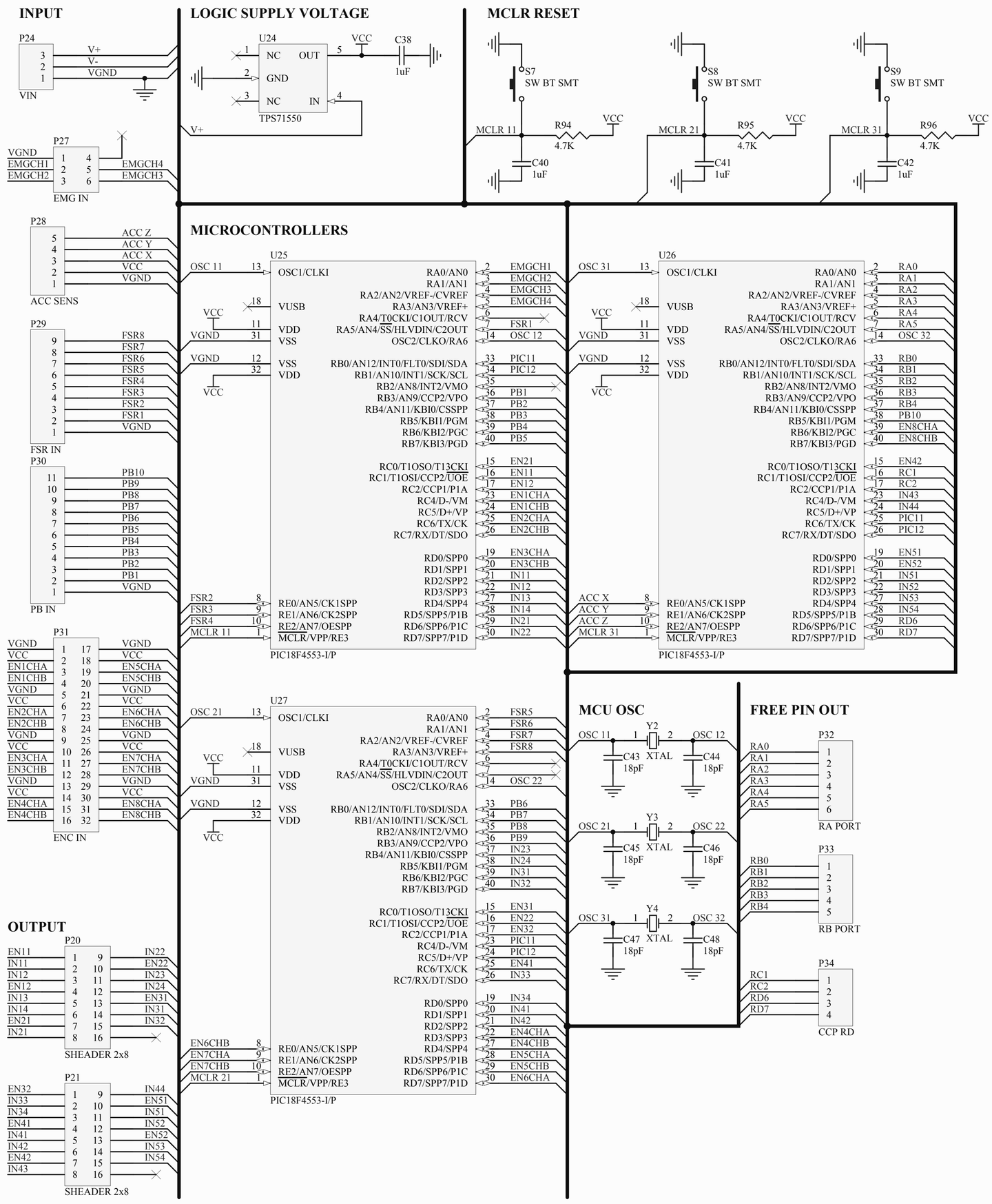

Title		
Size A3	Number	Revision
Date: 23/11/2013		Sheet of
File: C:\Users\..\McuPro.SchDoc		Drawn By:

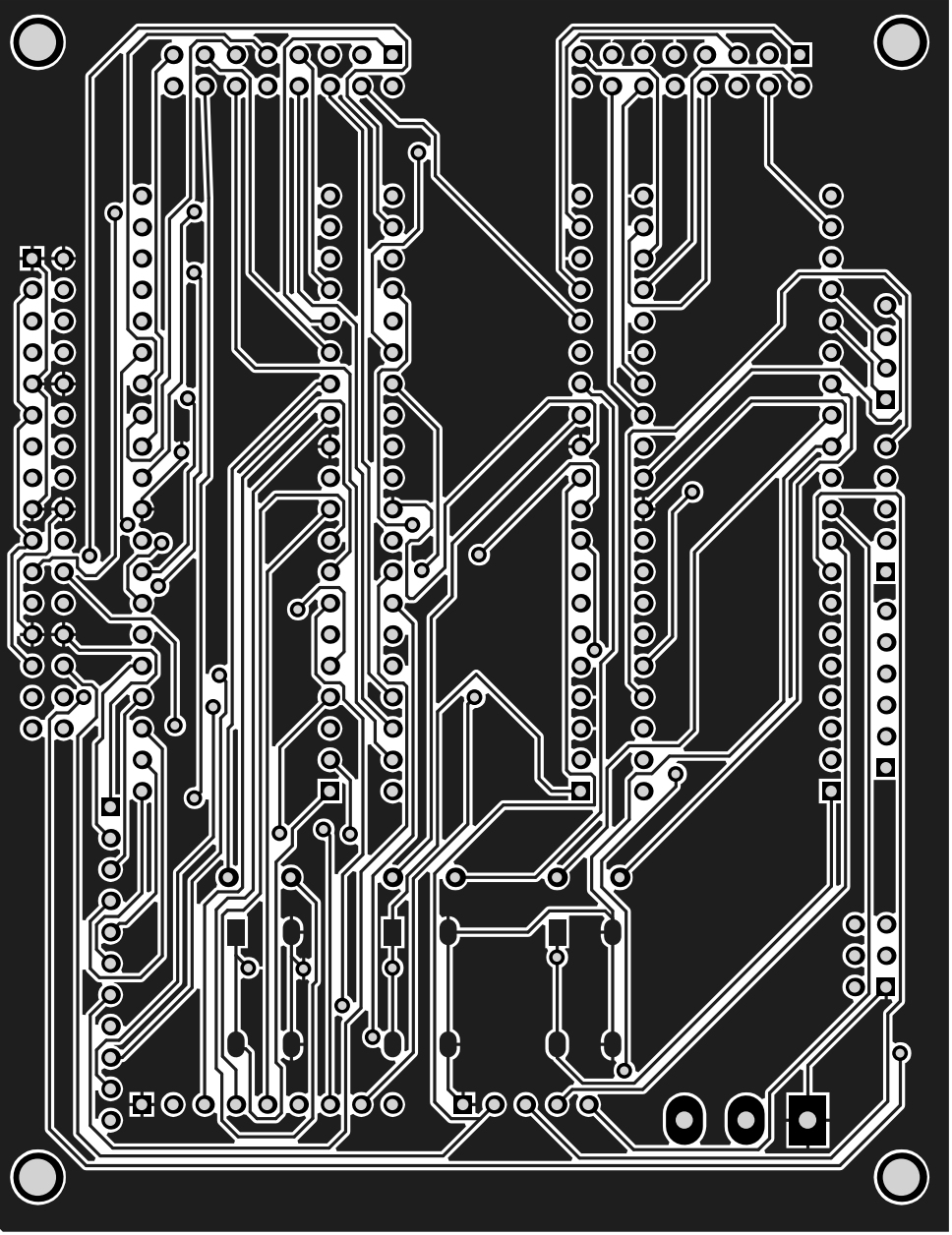

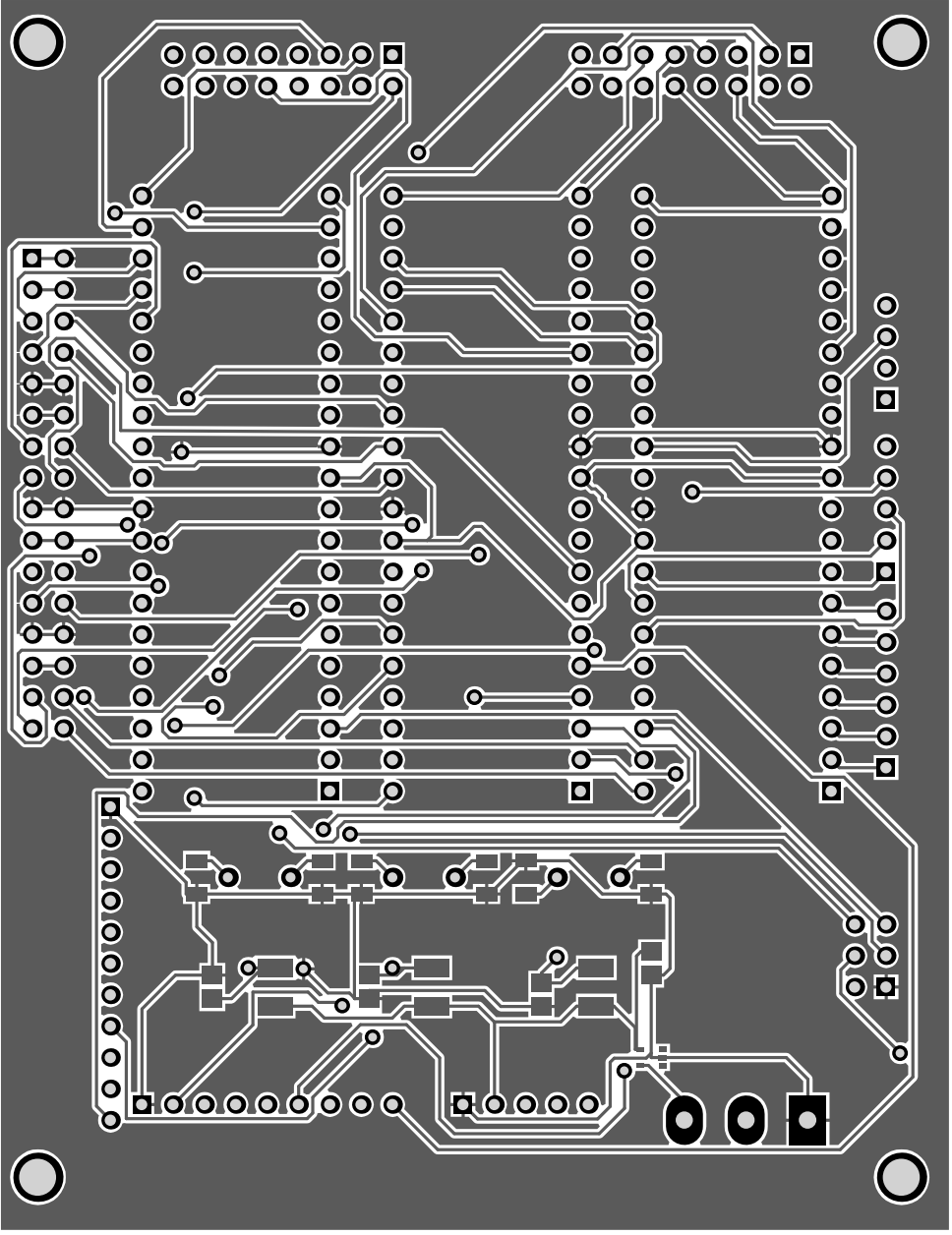

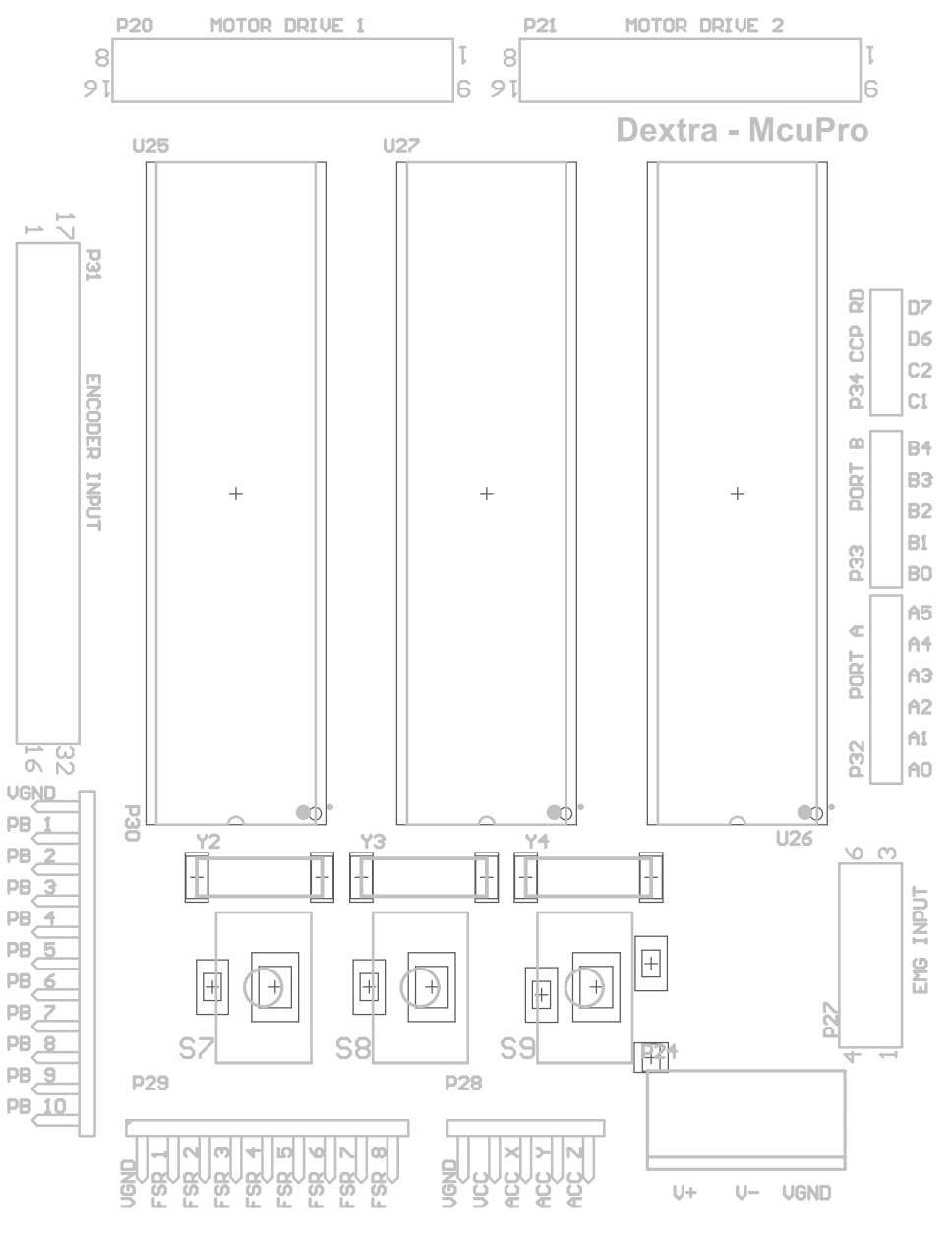
P20 MOTOR DRIVE 1
P21 MOTOR DRIVE 2
Dextra - McuPro
U25
U27
U26
P31 ENCODER INPUT
P34 CCP RD
D7
D6
C2
C1
PORT B P33
B4
B3
B2
B1
B0
PORT A P32
A5
A4
A3
A2
A1
A0
P30
VGND
PB 1
PB 2
PB 3
PB 4
PB 5
PB 6
PB 7
PB 8
PB 9
PB 10
Y2
Y3
Y4
S7
S8
S9
P24
P27 EMG INPUT
P29
P28
VGND FSR 1 FSR 2 FSR 3 FSR 4 FSR 5 FSR 6 FSR 7 FSR 8
VGND VCC ACC X ACC Y ACC Z
V+ V- VGND
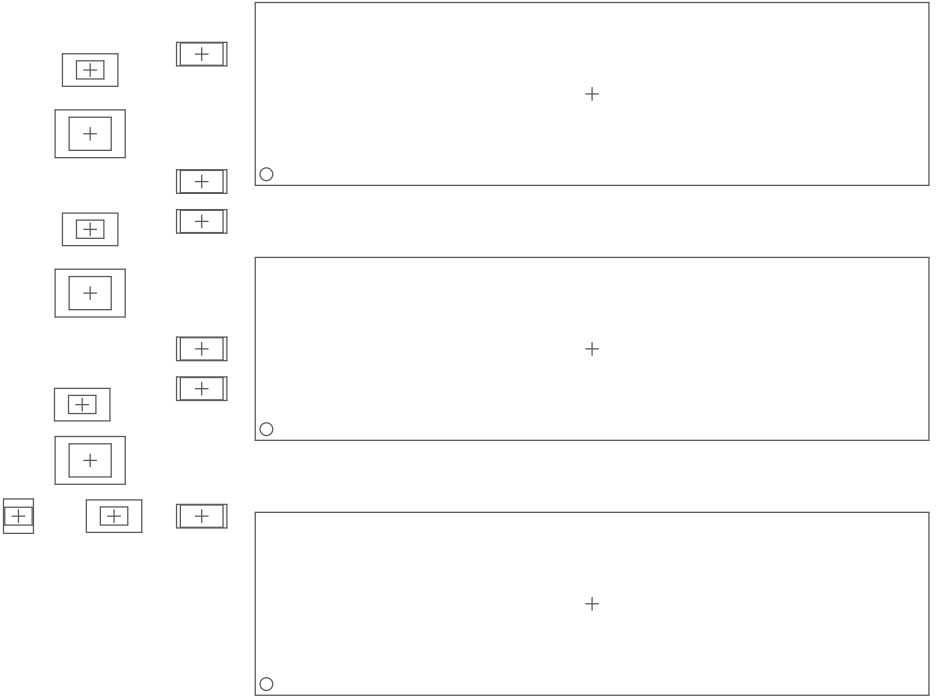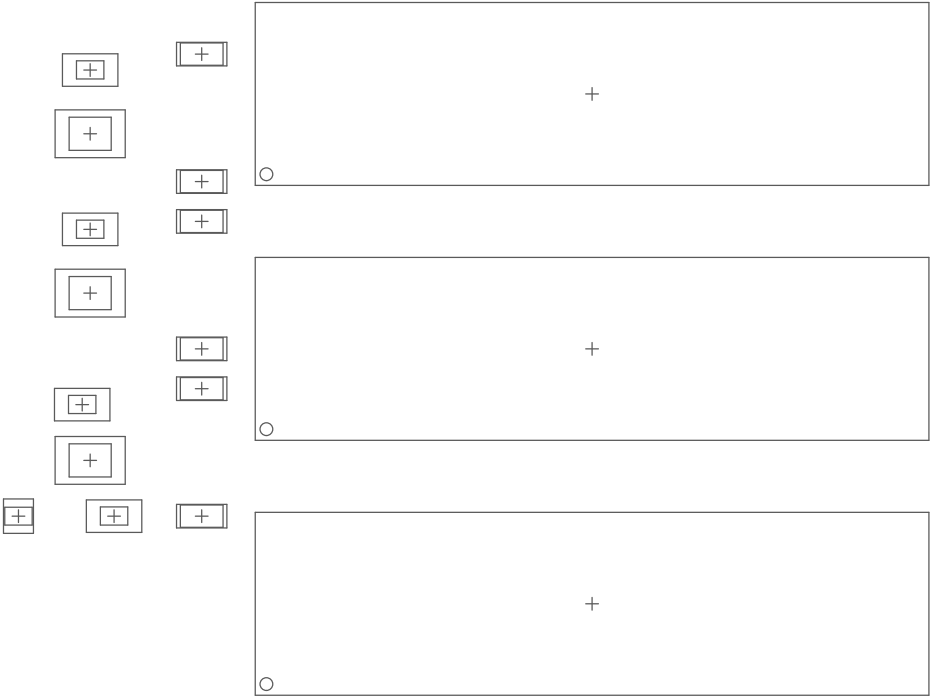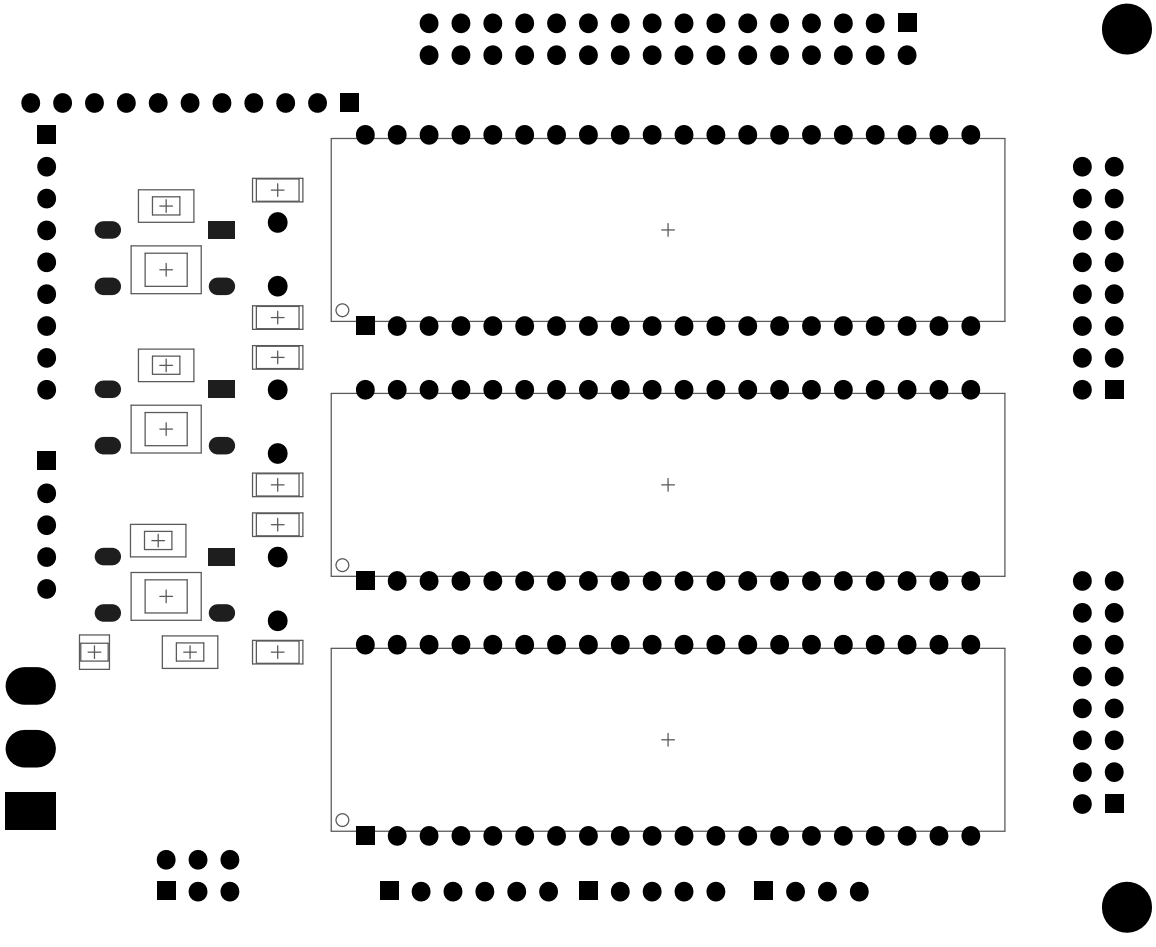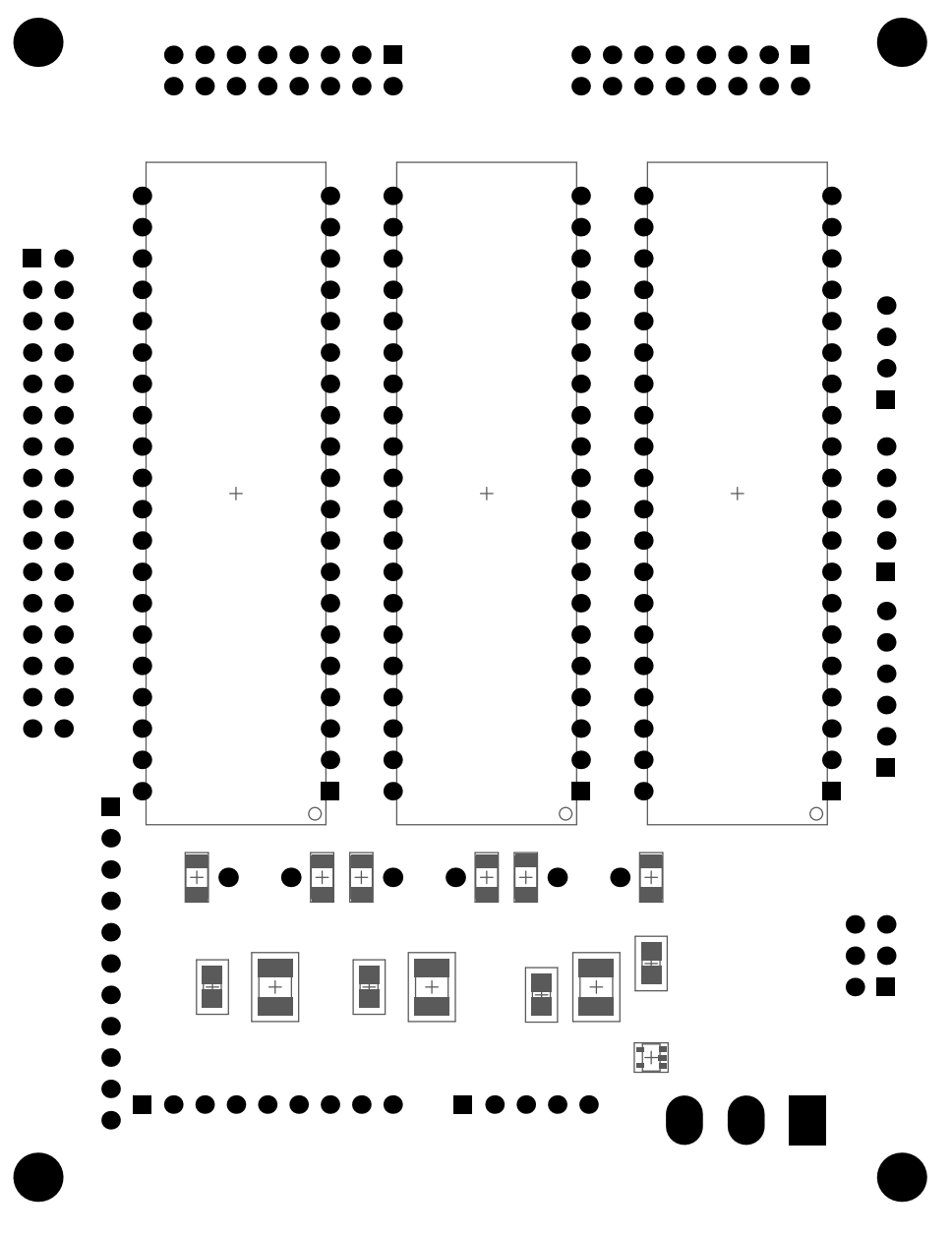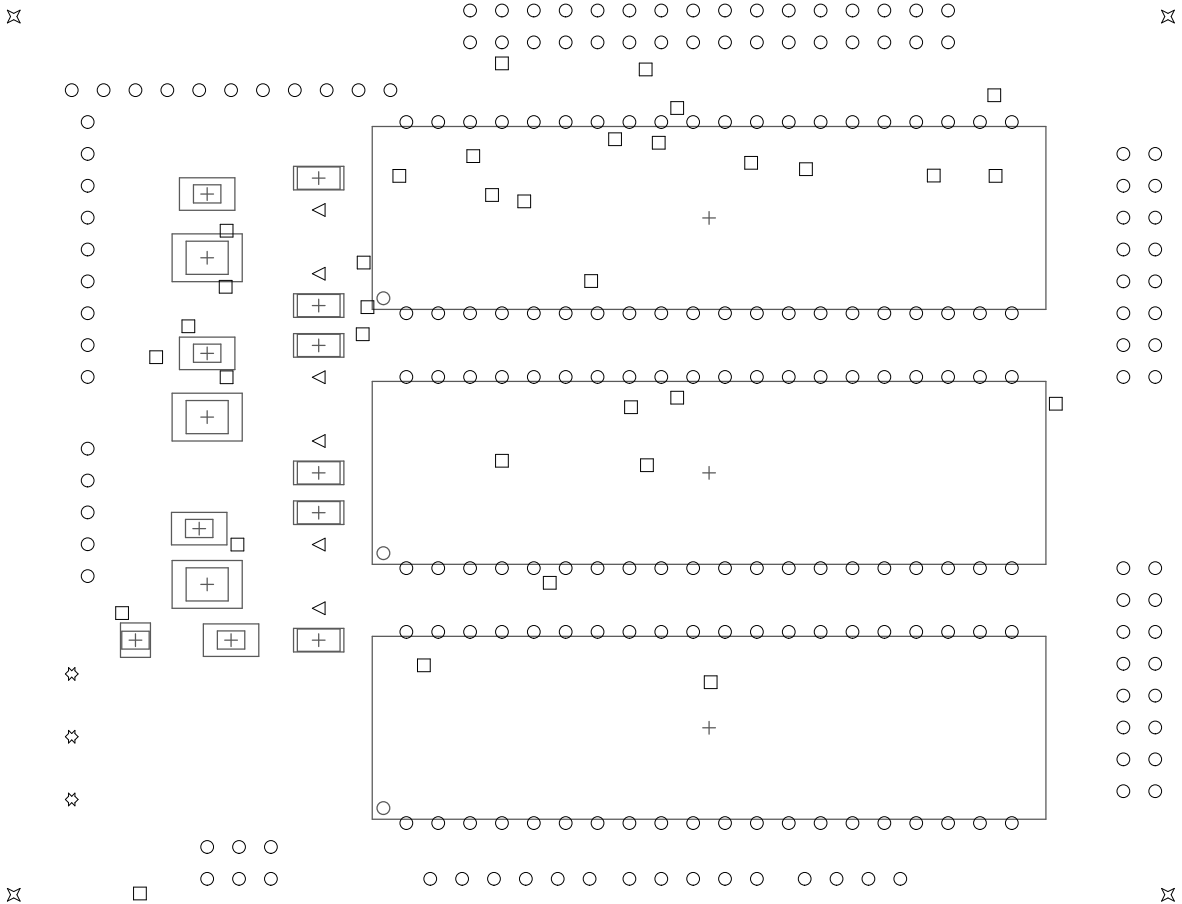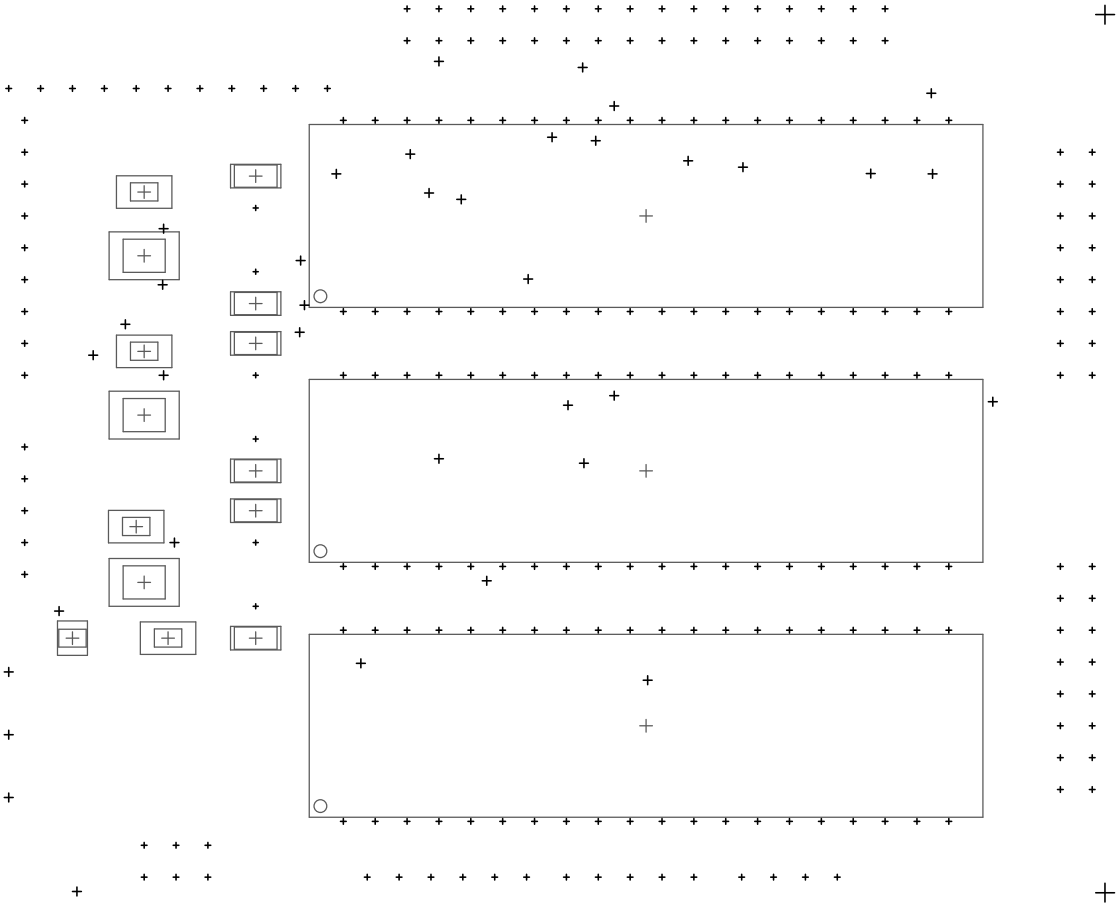
J. Alvarez 2011