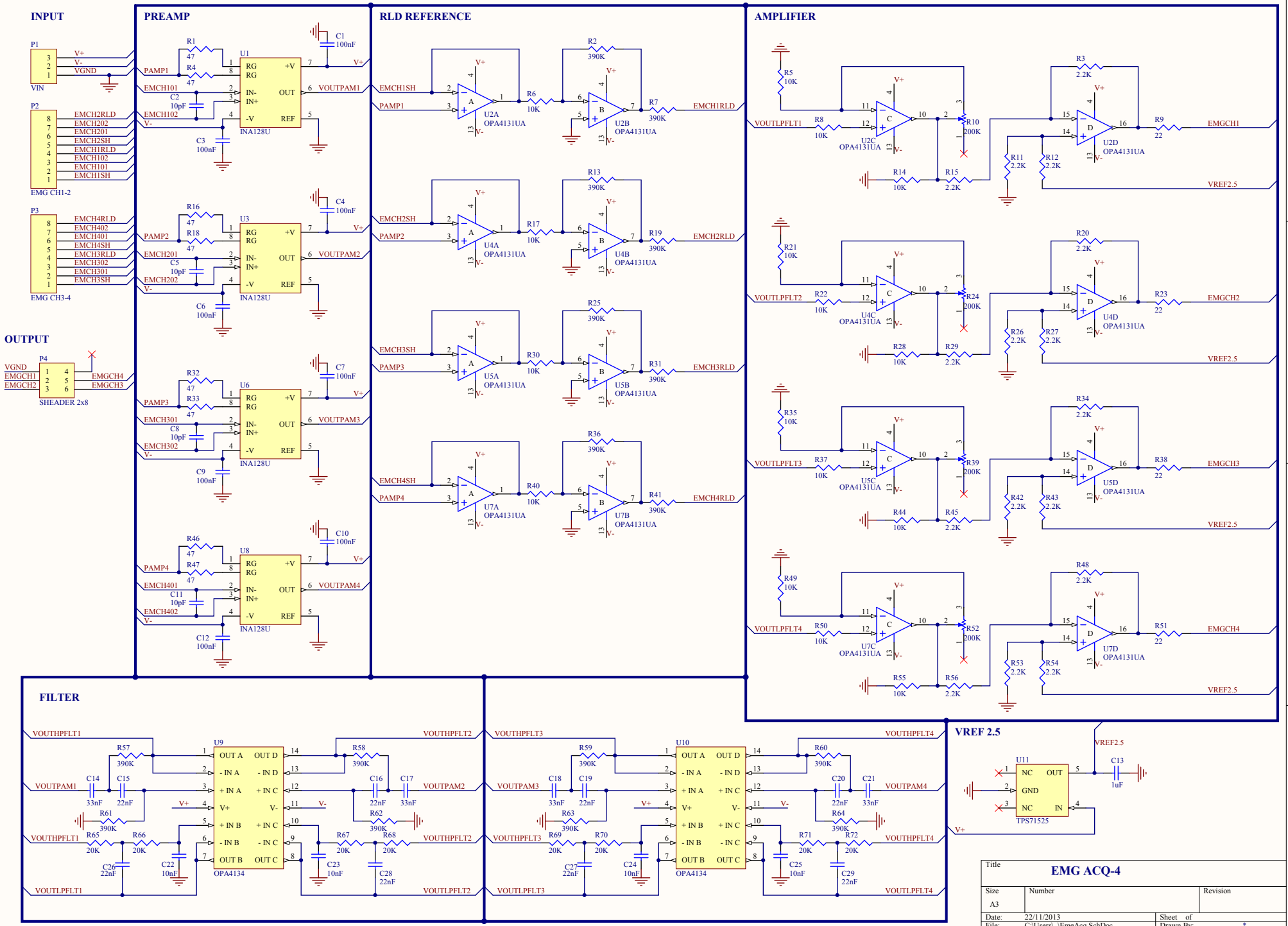
INPUT
PREAMP
RLD REFERENCE
AMPLIFIER
OUTPUT
FILTER
VREF 2.5
P1
VIN
P2
EMG CH1-2
P3
EMG CH3-4
P4
SHEADER 2x8
U1
U3
U6
U8
INA128U
U2A
U2B
U4A
U4B
U5A
U5B
U7A
U7B
OPA4131UA
U2C
U2D
U4C
U4D
U5C
U5D
U7C
U7D
U9
U10
OPA4134
U11
TPS71525
EMGCH1
EMGCH2
EMGCH3
EMGCH4
VREF2.5
Title
EMG ACQ-4
Size
A3
Number
Revision
Date: 22/11/2013
Sheet of
File: C:\Users\..\EmgAcq.SchDoc
Drawn By:

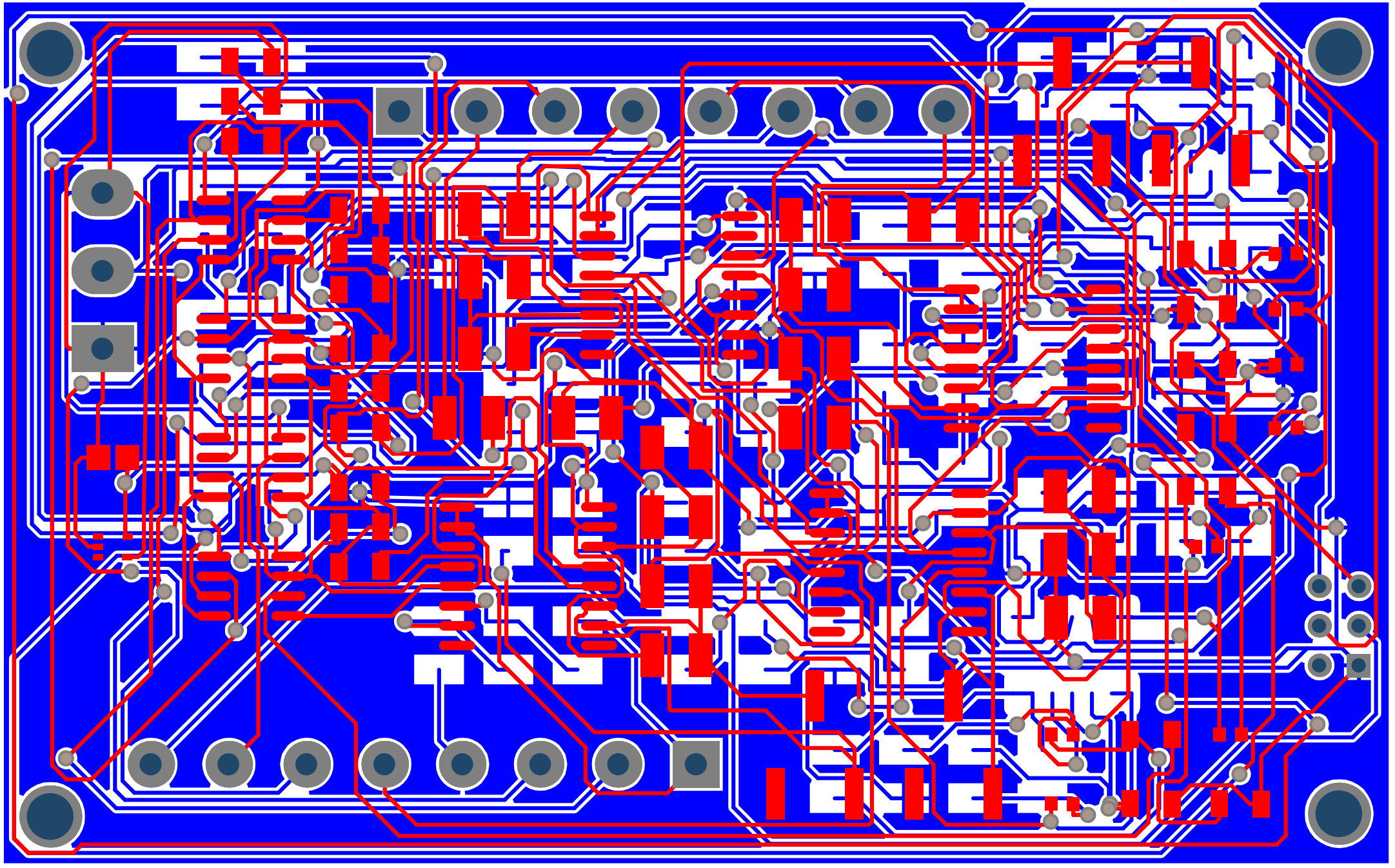

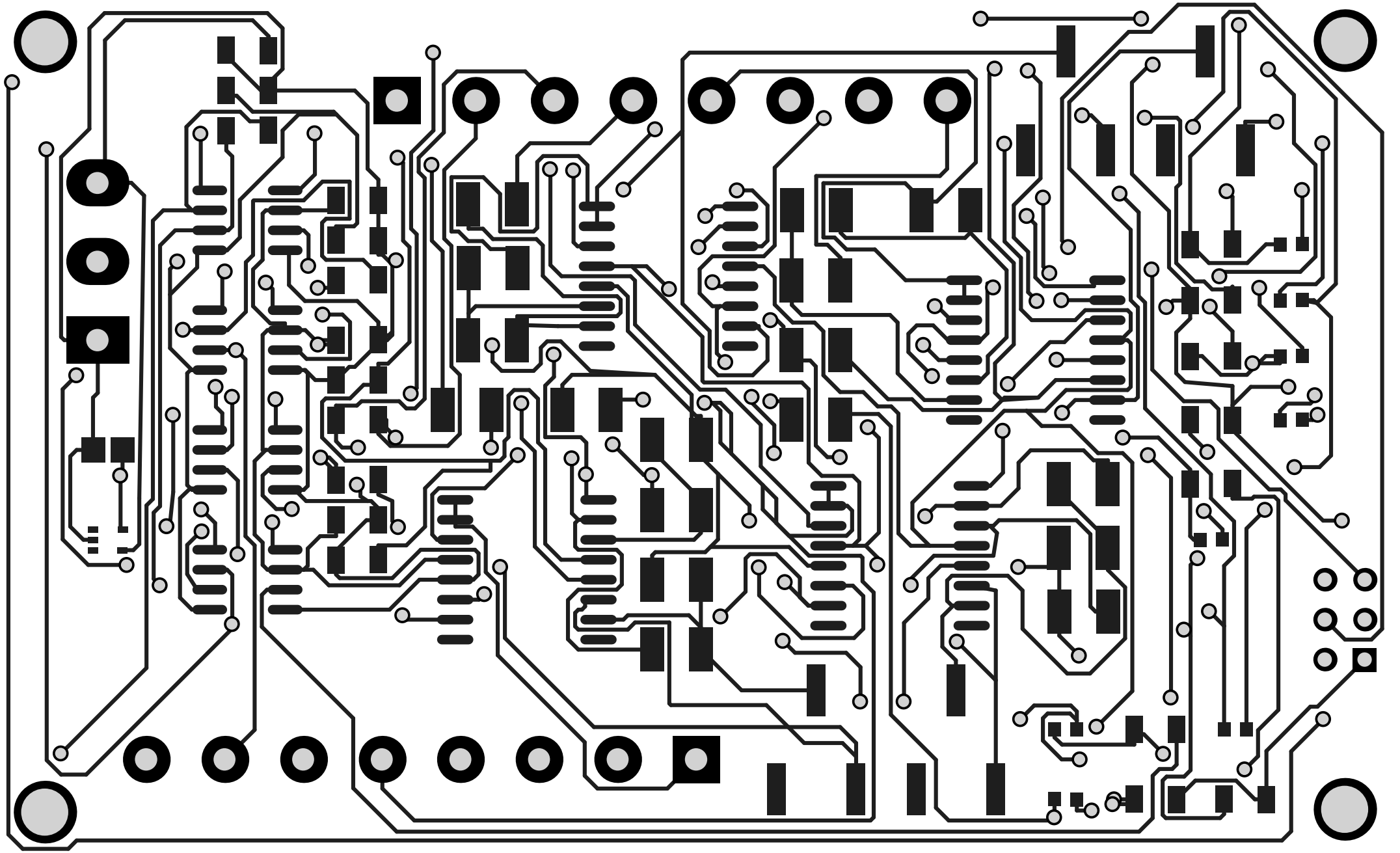

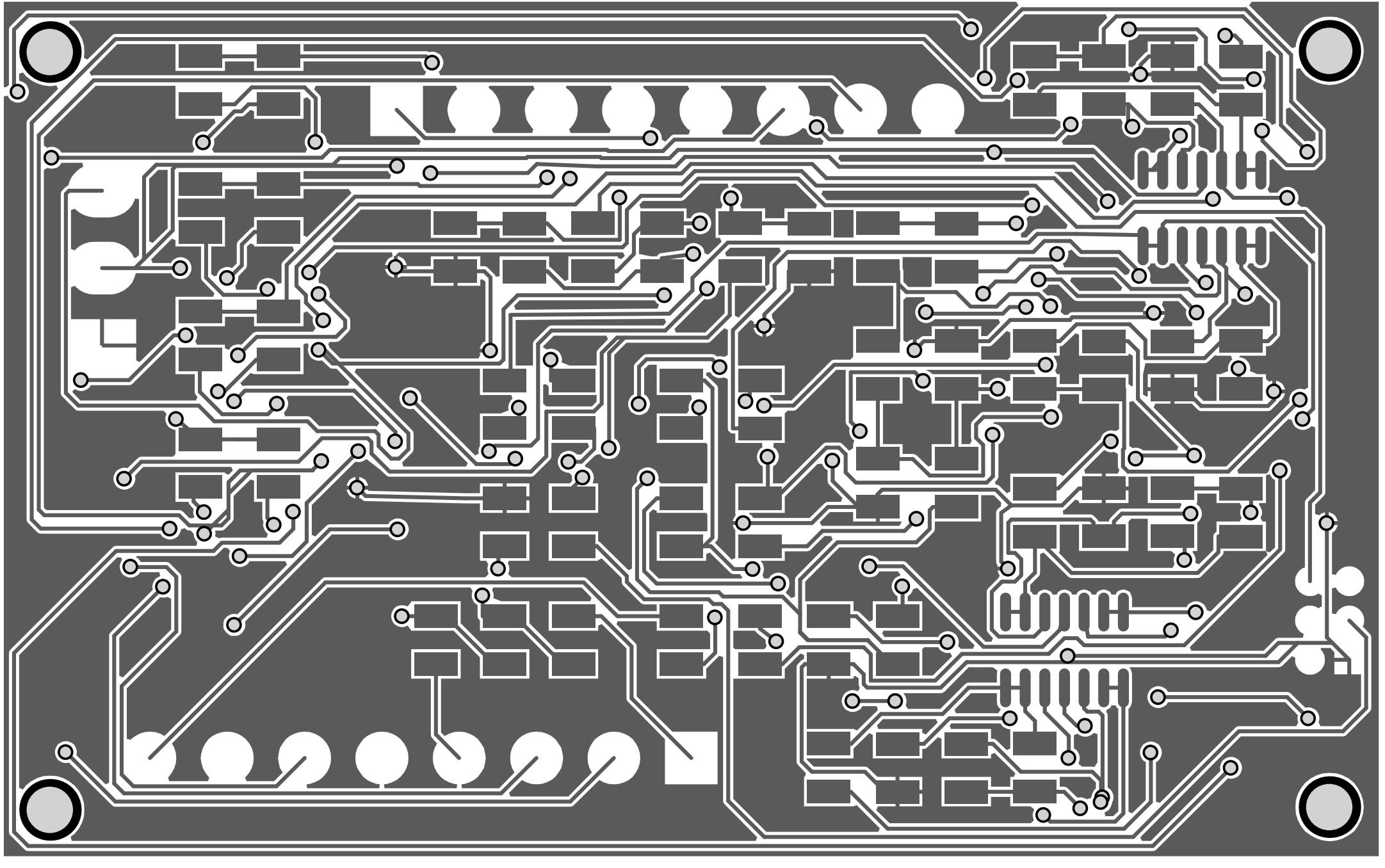

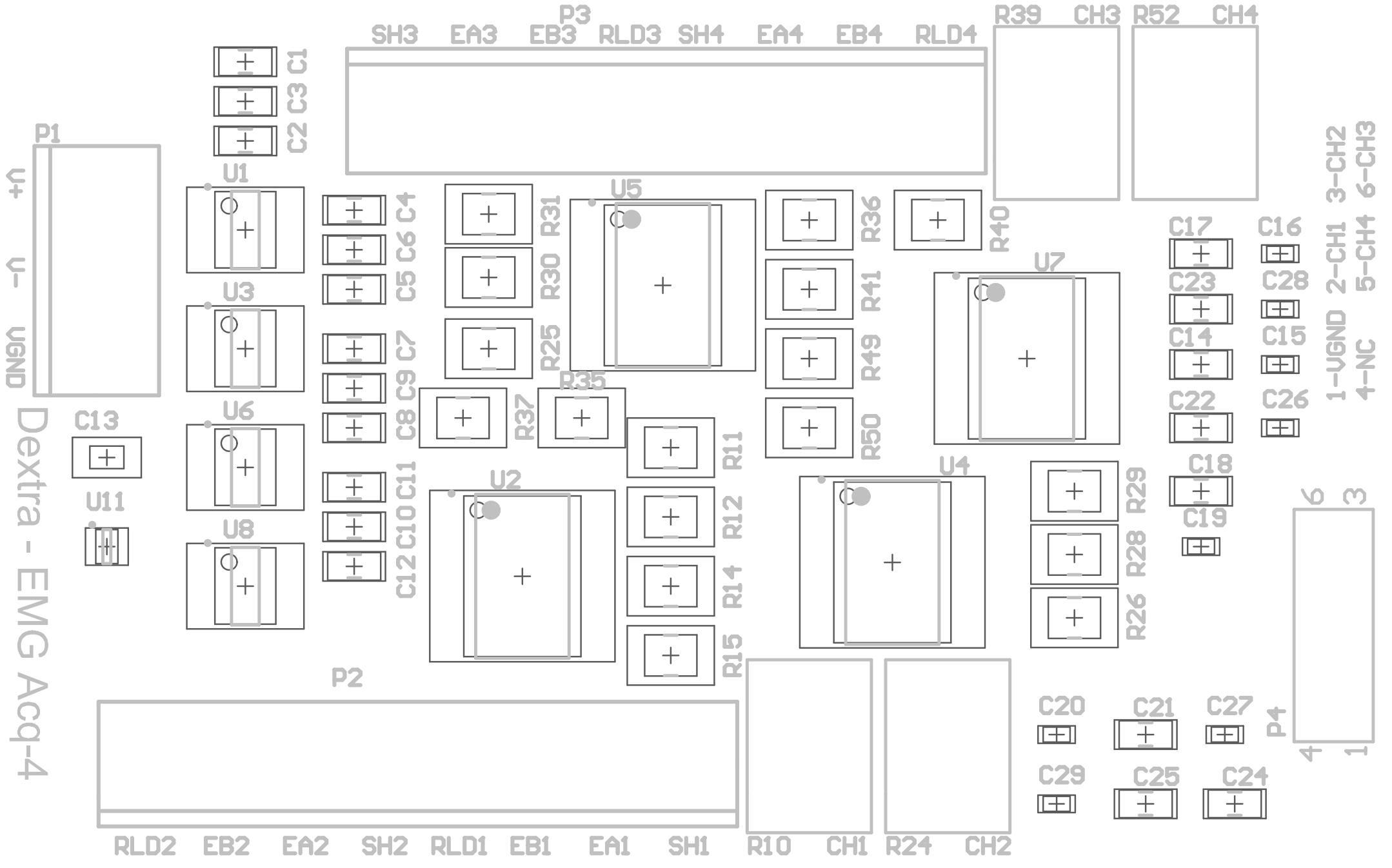
P3
SH3 EA3 EB3 RLD3 SH4 EA4 EB4 RLD4
R39 CH3 R52 CH4
P1
V+
V-
VGND
C1 C3 C2
U1
U3
U6
U8
C4 C6 C5 C7 C9 C8 C11 C10 C12
R31 R30 R25
U5
R36 R41 R49 R50
R40
U7
C17 C23 C14 C22 C18 C19
C16 C28 C15 C26
1-VGND 2-CH1 3-CH2
4-NC 5-CH4 6-CH3
C13
U11
R37 R35
R11 R12 R14 R15
U2
U4
R29 R28 R26
P2
C20 C21 C27
C29 C25 C24
P4
6 3
4 1
RLD2 EB2 EA2 SH2 RLD1 EB1 EA1 SH1
R10 CH1 R24 CH2
Dextra - EMG Acq-4

J Alvarez - 2011
R1
R4
R16
R18
R32
R33
R47
R46
R22
R21
R64
R60
U10
R27
R22
R19
R6
R2
R7
R20
R13
R9
R5
R23
R17
R3
R8
R54
R55
R53
R56
R69
R70
R63
R59
R57
R61
R66
R65
R51
R48
R42
R43
R34
R38
R45
R44
U9
R58
R62
R67
R68

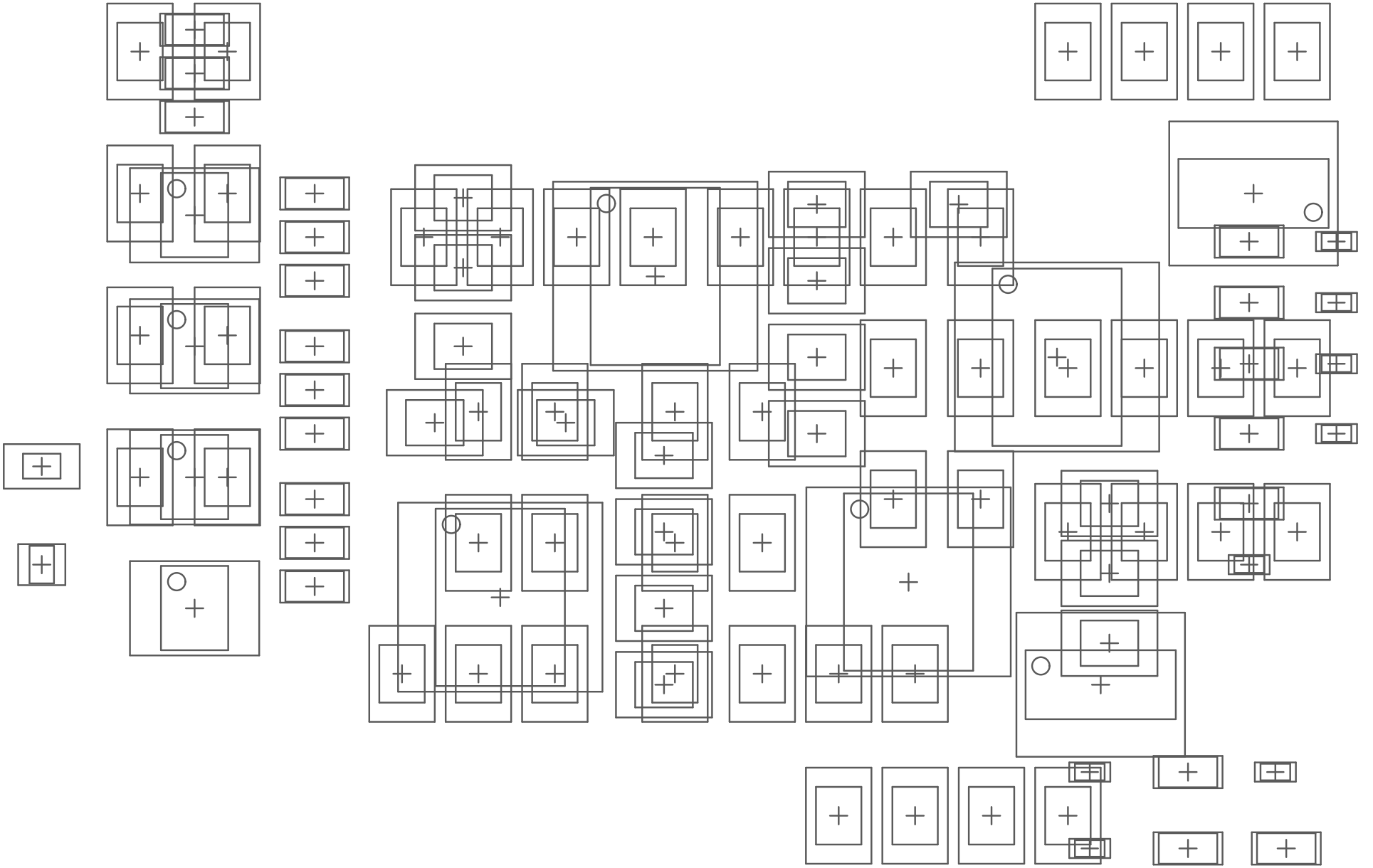

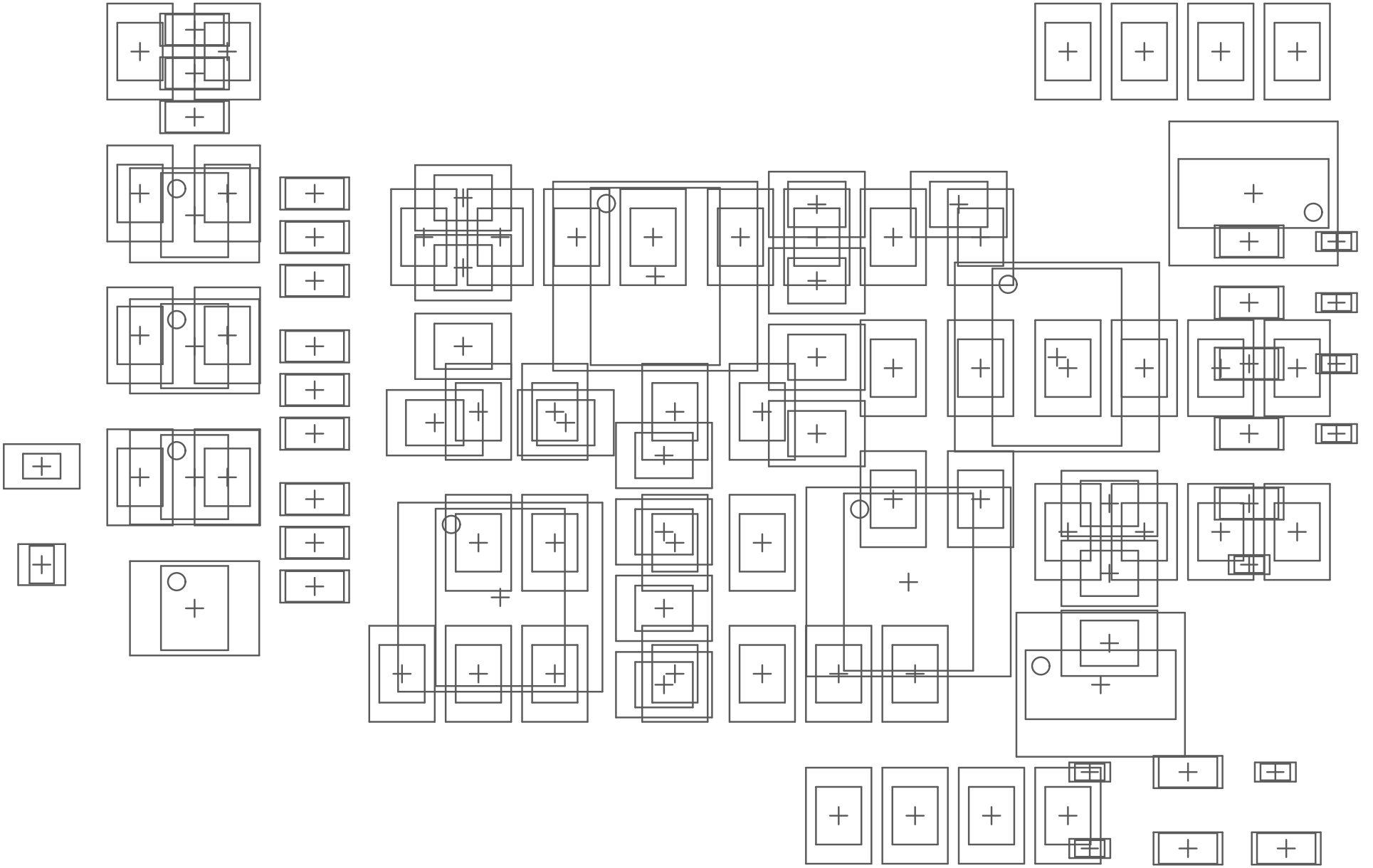

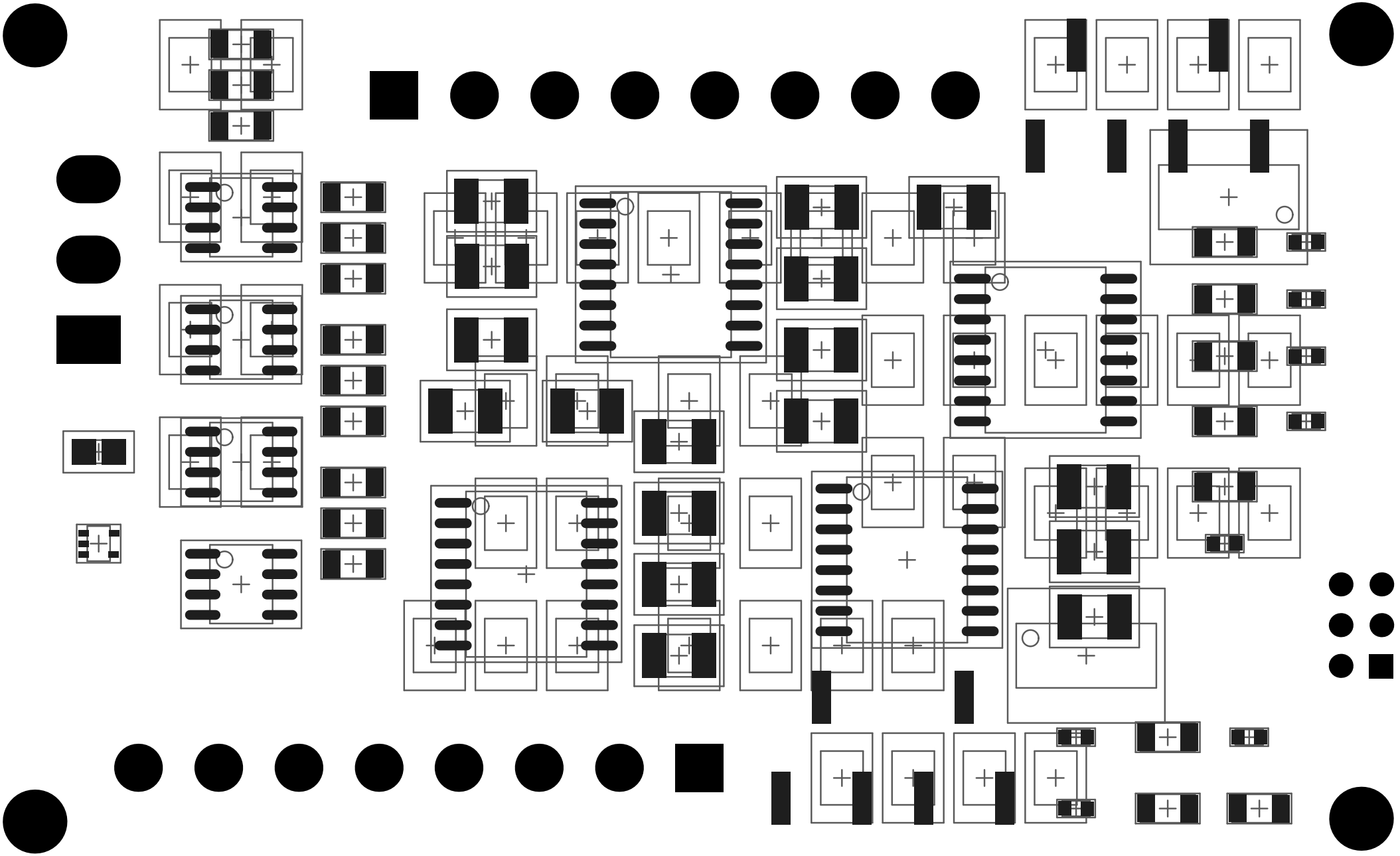

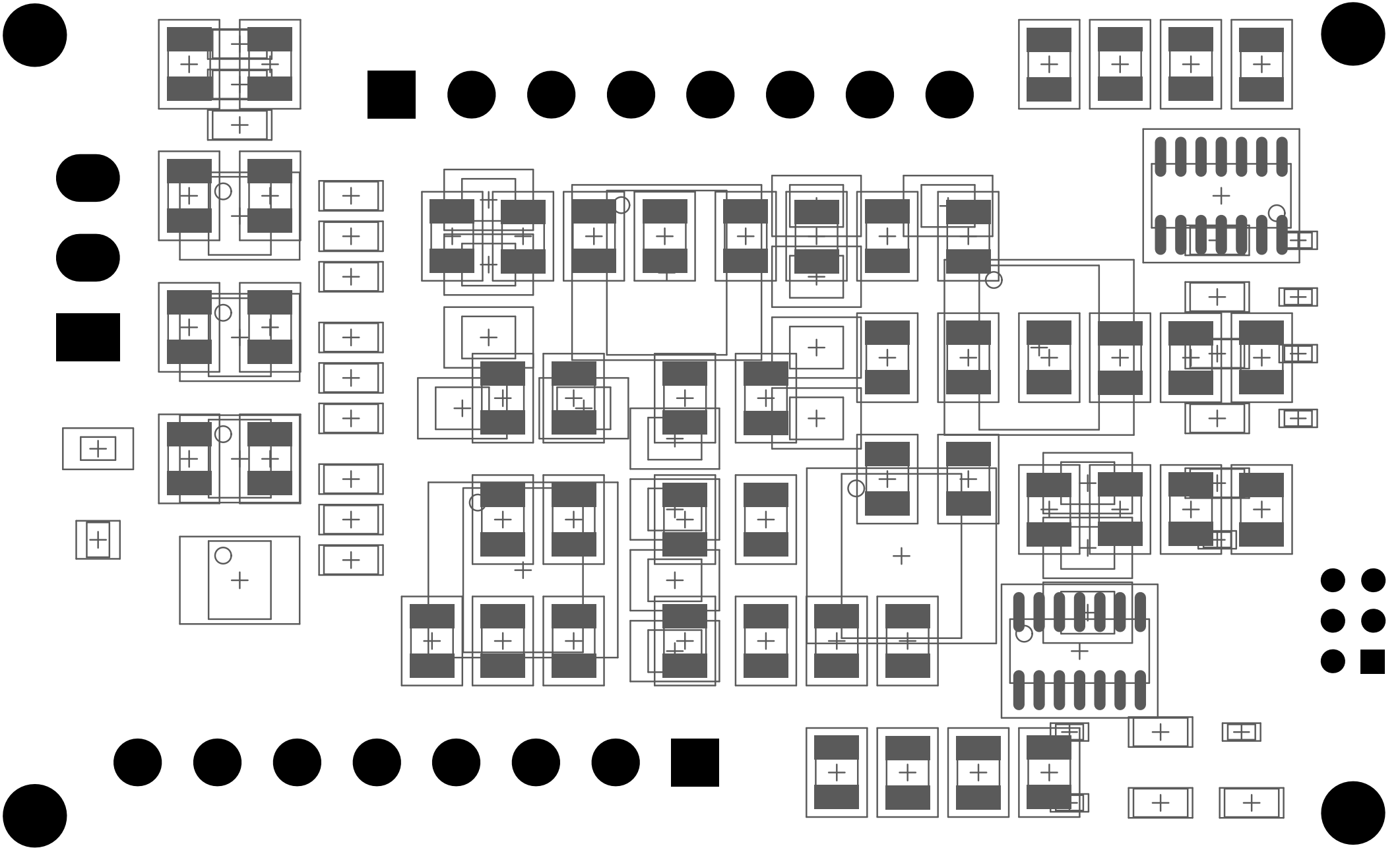

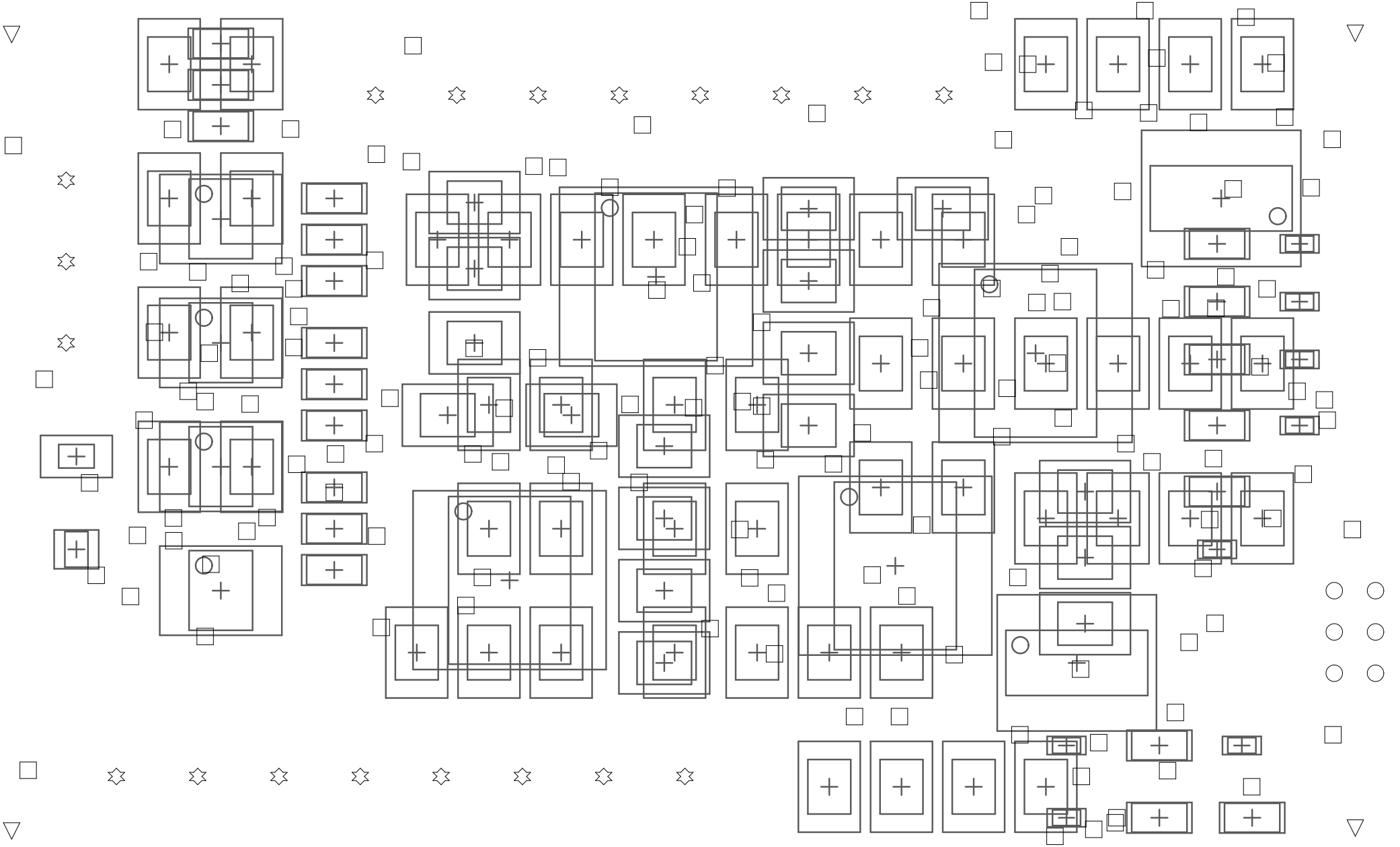

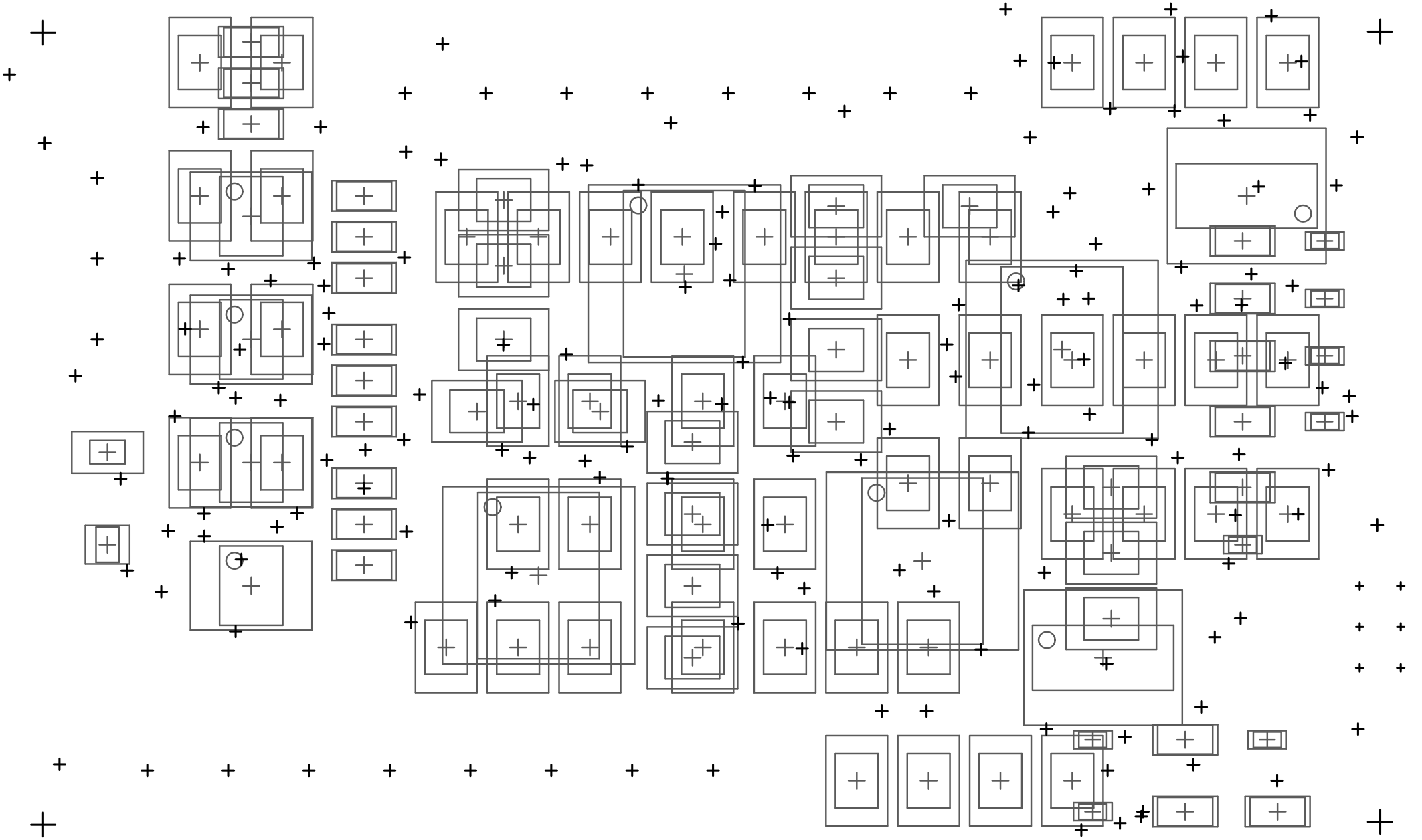

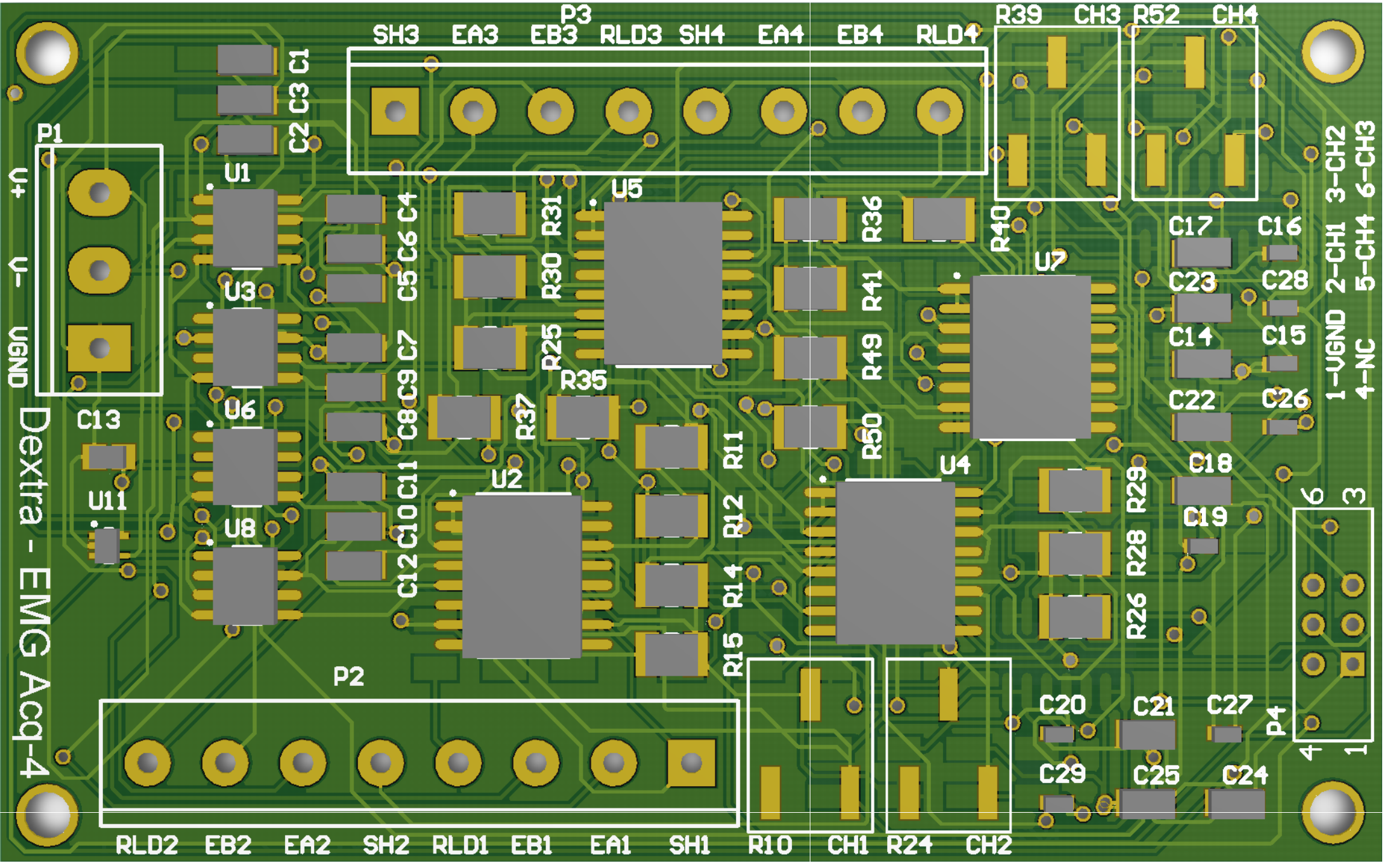
Dextra - EMG Acq-4
P1
v+
v-
VGND
P2
RLD2 EB2 EA2 SH2 RLD1 EB1 EA1 SH1
P3
SH3 EA3 EB3 RLD3 SH4 EA4 EB4 RLD4
P4
1-VGND 2-CH1 3-CH2
4-NC 5-CH4 6-CH3
R39 CH3 R52 CH4
R10 CH1 R24 CH2
U1 U2 U3 U4 U5 U6 U7 U8 U11
C1 C2 C3 C4 C5 C6 C7 C8 C9 C10 C11 C12 C13 C14 C15 C16 C17 C18 C19 C20 C21 C22 C23 C24 C25 C26 C27 C28 C29
R11 R12 R14 R15 R25 R26 R28 R29 R30 R31 R35 R36 R37 R40 R41 R49 R50

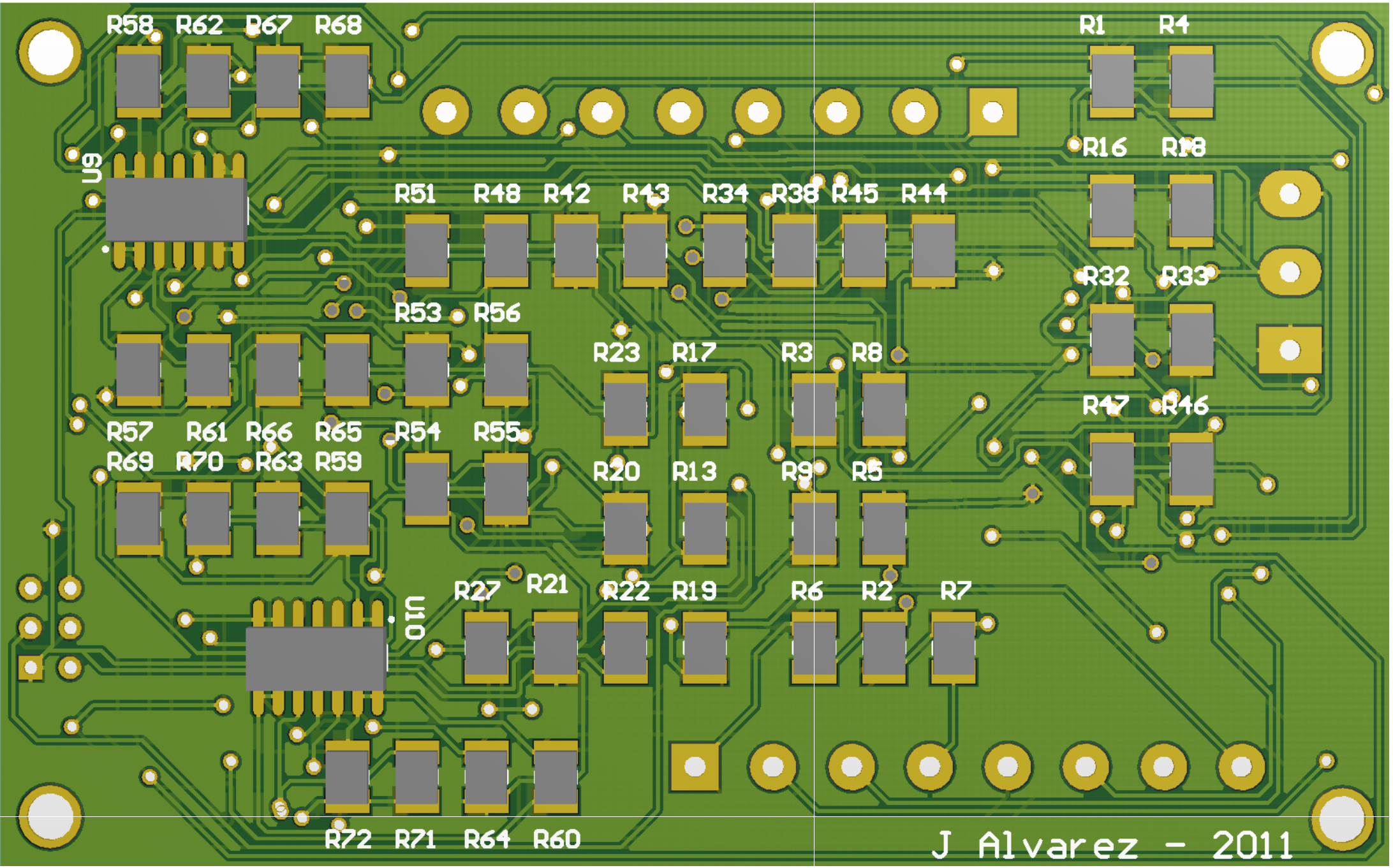
R58 R62 R67 R68
R1 R4
U9
R16 R18
R51 R48 R42 R43 R34 R38 R45 R44
R32 R33
R53 R56
R23 R17 R3 R8
R47 R46
R57 R61 R66 R65 R54 R55
R69 R70 R63 R59
R20 R13 R9 R5
U10
R27 R21 R22 R19 R6 R2 R7
R72 R71 R64 R60
J Alvarez - 2011