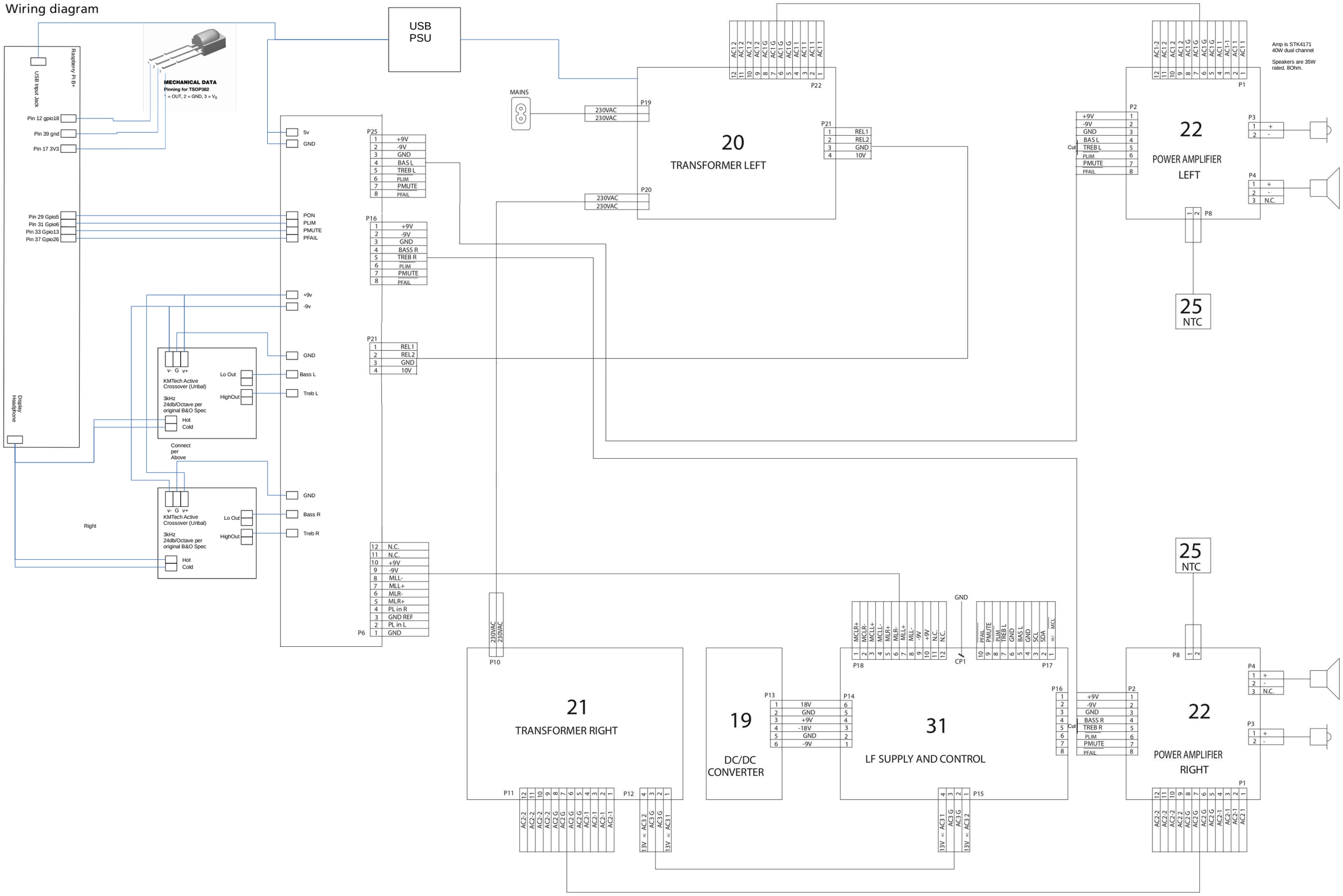Wiring diagram